LOT 90
IN OR 2031/51
BUCKS FDNA BEACH #1 PB 2/30

BLOUNT KIMBERLY J
2825 S FLETCHER AVE
FERNANDINA BEACH, FL 32034

2025

00-00-31-114A-0090-0000

BUILDING CHARACTERISTICS

ELEMENT	CD	CONSTRUCTION
Exterior Wall	16	WD FR STUC 100
Roof Structur	03	GABLE/HIP 100
Roof Cover	03	COMP SHNGL 100
Interior Wall	05	DRYWALL 100
Interior Floo	13	LVT/LAMNT 50
Interior Floo	14	CARPET 50
Air Condition	03	CENTRAL 100
Heating Type	04	AIR DUCTED 100
Bedrooms		3 100
Bathrooms		3 100
Frame	02	WOOD FRAME 100
Stories	2.	2. 100
Units		0 100
Occupancy	00	NONE 100
Quality	05	Quality Level 05

DOR CODE 0100 SINGLE FAMILY
MAP NUM | MKT AREA 01
NEIGHBORHOOD/LOC 1058.00

AREA TYPE	TOTAL GROSS AREA	PCT OF BASE	YEAR	TOT ADJ AREA	SUBAREA MARKET VALUE
BAS	920	100	1999	920	131,676
FGR	480	55	1999	264	37,785
FOP	8	30	1999	2	286
FOP	315	30	2024	94	13,454
FUS	1,256	100	1999	1,256	179,765
PTO	8	5	1999	0	0
STR	70	10	2024	7	1,002
UOP	144	20	1999	29	4,150
UOP	324	20	2024	65	9,303
TOTALS	3,525			2,637	377,421

MARKET ADJUSTMENTS

TYPE	MDL	EFF. AREA	TOT ADJ PTS	EFF. BASE RATE	REPL. COST NEW	AYB	EYB	ECON	FNCT		NORM	% COND
0900	01	2,637	117.2160	154.73	408,023	1999	2009	0	0	0	7.50	92.50

2 SNGL FAM – 100% - 2024 Heated Area: 2176 HX Base Yr 2024

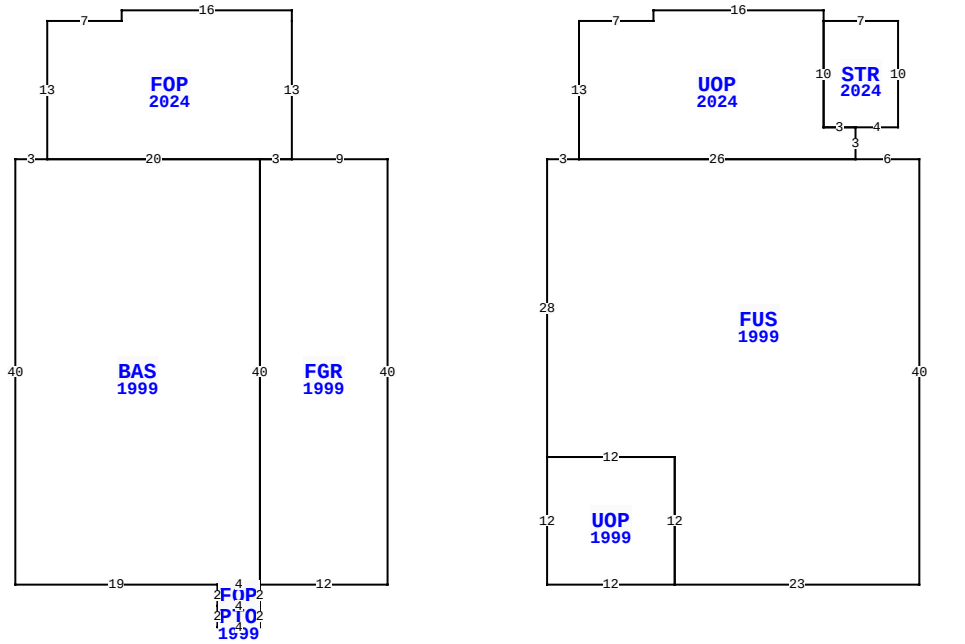

2825 S FLETCHER AVE, FERNANDINA BEACH

BLD DATE		LGL DATE	
XF DATE		LAND DATE	05/07/2025 MLU
INC DATE		AG DATE	

NASSAU COUNTY PROPERTY

PAGE 1 of 1 2

VALUATION SUMMARY

VALUATION BY		STANDARD
Tax Group: 2	Tax Dist:	
BUILDING MARKET VALUE		377,421
TOTAL MARKET OB/XF VALUE		35,795
TOTAL LAND VALUE - MARKET		360,000
TOTAL MARKET VALUE		773,216
SOH/AGL Deduction		20,191
ASSESSED VALUE		753,025
TOTAL EXEMPTION VALUE	HX HB WX	55,722
BASE TAXABLE VALUE		697,303
TOTAL JUST VALUE		773,216
NCON VALUE		0
INCOME VALUE		
PREVIOUS YEAR MKT VALUE		731,803

PERMIT NUM	DESCRIPTION	AMT	ISSUED
20200698	SWIM POOL	0	01/20/2021
20121497	DRYWL,DOOR	3,500	07/25/2012
B020294	XFOB	2,000	02/21/2002
B984206	NEW CONSTR	115,000	08/24/1998
3585B	N/A	400	02/01/1986

SALES DATA

OFF RECORD Number	DATE	TYPE INST	Q / U	V / I	RSN CD	SALE PRICE
2379/0826	7/15/2020	WD	Q	I	01	635,000
GRANTOR: LAWRENCE BEVERLEE A &						
GRANTEE: BLOUNT KIMBERLY J &						
2031/0051	3/01/2016	WD	U	I	11	100
GRANTOR: LAWRENCE BEVERLEE A						
GRANTEE: LAWRENCE BEVERLY A						

BUILDING NOTES

BUILDING DIMENSIONS

FUS=[YR=1999;ORIG=15,0] E3 E26 E6 S40 W23 N12 W12 N28 $
BAS=[YR=1999;ORIG=-12,0] W20 W3 S40 E19 E4 N40 $
FGR=[YR=1999;ORIG=0,0] W9 W3 S40 E12 N40 $
UOP=[YR=1999;ORIG=27,40] N12 W12 S12 E12 $
FOP=[YR=1999;ORIG=-16,40] S2 E4 N2 W4 $
PTO=[YR=1999;ORIG=-16,42] S2 E4 N2 W4 $
PTR=[ORIG=0,0] E15 W15 $
UOP=[YR=2024;ORIG=18,0] E26 N3 W3 N10 N1 W16 S1 W7 S13 $
STR=[YR=2024;ORIG=41,-13] E7 S10 W4 W3 N10 $
FOP=[YR=2024;ORIG=-32,0] E20 E3 N13 N1 W16 S1 W7 S13 $
.

EXTRA FEATURES

LN	OB/XF CODE	DESCRIPTION	BLD	CAP	L	W	UNITS	UT	Adj R	ADJ UNIT PRICE	ORIG COND	YEAR ON	YEAR ACTUAL	Q	% COND	OB/XF MKT VALUE	NOTES
1	0810	CONCRETE A	0	100	0	0	742.00	SF	6.50	6.50	100	1999	1999	3	75	3,617	
2	0810	CONCRETE A	0	100	11	3	33.00	SF	6.50	6.50	100	1999	1999	3	75	161	
3	0810	CONCRETE A	0	100	0	0	226.00	SF	6.50	6.50	100	2002	2002	3	80	1,175	
4	0861	POOL GUNIT	0	100	24	12	288.00	SF	85.00	85.00	100	2024	2023		98	23,990	
5	0857	SANDSTONE/	0	100	0	0	307.00	SF	16.00	16.00	100	2024	2023		100	4,912	
6	0871	POOL HTR R	0	100	0	0	1.00	UT	2,000.00	2,000.00	100	2024	2023		97	1,940	

LAND DESCRIPTION

TOTAL OB/XF 35,795

LN	USE CODE	CLS	LAND USE DESCRIPTION	CAP	RD	LOC ZONE	FRONT	DEPTH	TOT LND UTS	UNIT TYPE	DT	DPTH FACT	% COND	TOT ADJ	UNIT PRICE	ADJ UNIT PRICE	LAND VALUE	OTHER ADJUSTMENTS AND NOTES	YEAR	DENSITY	DECL	FRZ	YR	CONSRV
1	000100	C	RES	100		R-2	50.00	110.00	50.00	FF		1.00	1.00	0.96	7,500.00	7,200.00	360,000							

REVIEW DATE 03/07/2022 BY DJ Total Acres: 0.00 Total Land Value: 360,000 Market: 0 Agricultural: 0 Common: 360,000 PRINTED 07/30/2025 BY SYS