LOT 89
IN OR 1887/752
BUCKS FDNA BEACH 1 PB 2/30

MEYER MICHAEL S/MEYER LISA ANN ET AL
121 SUBURBAN DRIVE NE
KENNESAW, GA 30144

2025

00-00-31-114A-0089-0000

BUILDING CHARACTERISTICS

ELEMENT	CD	CONSTRUCTION
Exterior Wall	05	AVERAGE 100
Roof Structur	03	GABLE/HIP 100
Roof Cover	03	COMP SHNGL 100
Interior Wall	05	DRYWALL 50
Interior Wall	06	CUST PANEL 50
Interior Floo	09	PINE WOOD 60
Interior Floo	14	CARPET 40
Air Condition	03	CENTRAL 100
Heating Type	04	AIR DUCTED 100
Bedrooms		3 100
Bathrooms		2 100
Frame	02	WOOD FRAME 100
Stories	1.	1. 100
Units		0 100
BUD8 Adjustme	02	DIST FB 100
Occupancy	00	NONE 100
Quality	03	Quality Level 03
DOR CODE	0100	SINGLE FAMILY
MAP NUM		MKT AREA 01
NEIGHBORHOOD/LOC	1058.00	

AREA TYPE	TOTAL GROSS AREA	PCT OF BASE	YEAR	TOT ADJ AREA	SUBAREA MARKET VALUE
BAS	1,552	100	1993	1,552	124,484
FCP	132	25	1993	33	2,647
FOP	112	30	1993	34	2,727
STP	15	10	1993	2	160
STP	18	10	1993	2	160
UBM	165	20	1993	33	2,647
UOP	128	20	1993	26	2,085
TOTALS	2,122			1,682	134,911

MARKET ADJUSTMENTS

TYPE	MDL	EFF. AREA	TOT ADJ PTS	EFF. BASE RATE	REPL. COST NEW	AYB	EYB	ECON	FNCT		NORM	% COND
0100	01	1,682	109.5000	109.50	184,179	1946	1946	0	0	0	26.75	73.25

1 SINGLE FAM – 0% - 0 Heated Area: 1552 HX Base Yr

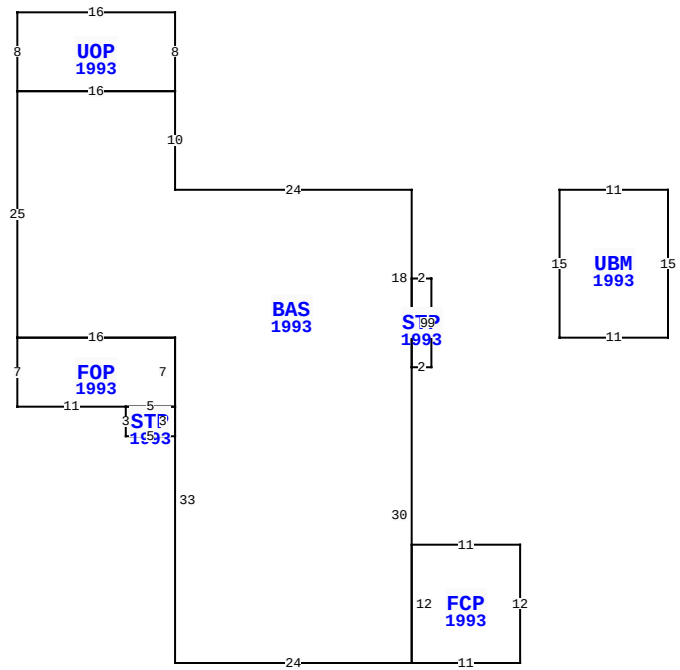

BLD DATE		LGL DATE	
XF DATE		LAND DATE	05/07/2025 MLU
INC DATE		AG DATE	

2815 S FLETCHER AVE, FERNANDINA BEACH

NASSAU COUNTY PROPERTY

PAGE 1 of 1 2

VALUATION SUMMARY

VALUATION BY	STANDARD
Tax Group: 2	Tax Dist:
BUILDING MARKET VALUE	134,911
TOTAL MARKET OB/XF VALUE	586
TOTAL LAND VALUE - MARKET	360,000
TOTAL MARKET VALUE	495,497
SOH/AGL Deduction	13,573
ASSESSED VALUE	481,924
TOTAL EXEMPTION VALUE	0
BASE TAXABLE VALUE	481,924
TOTAL JUST VALUE	495,497
NCON VALUE	0
INCOME VALUE	
PREVIOUS YEAR MKT VALUE	465,183

PERMIT NUM	DESCRIPTION	AMT	ISSUED
B033854	REPAIR/RRF	2,000	09/18/2003

SALES DATA

OFF RECORD Number	DATE	TYPE INST	Q U /	V I /	RSN CD	SALE PRICE
1887/0752	10/29/2013	WD	Q	I	02	238,500
GRANTOR: PRESTIA DONNA & GEORG						
GRANTEE: MEYER MICHAEL S & L						
1278/1607	12/06/2004	WD	Q	I		345,000
GRANTOR: CASERTA CHRISTOPHER &						
GRANTEE: PRESTIA DONNA & GEO						

BUILDING NOTES

BUILDING DIMENSIONS

BAS=[YR=1993] W24 N10 UOP=[YR=1993] N8 W16 S8 E16 $ W16 S25 FOP=[YR=1993] S7 E11 STP=[YR=1993] S3 E5 N3 W5 $ E5 N7 W16 $ E16 S33 E24 FCP=[YR=1993] E11 N12 W11 S12 $ N30 STP=[YR=1993] E2 N9 W2 S9 $ N18 $ PTR= E15 UBM 1993= E11 S15 W11 N15 $ W15 $.

EXTRA FEATURES

LN	OB/XF CODE	DESCRIPTION	BLD	CAP	L	W	UNITS	UT	Adj R	ADJ UNIT PRICE	ORIG COND	YEAR ON	YEAR ACTUAL	Q	% COND	OB/XF MKT VALUE	NOTES
1	0810	CONCRETE A	0	0	0	0	451.00	SF	6.50	6.50	100	1960	1960	3	20	586	

LAND DESCRIPTION

TOTAL OB/XF 586

LN	USE CODE	CLS	LAND USE DESCRIPTION	CAP	RD	LOC ZONE	FRONT	DEPTH	TOT LND UTS	UNIT TYPE	DT	DPTH FACT	% COND	TOT ADJ	UNIT PRICE	ADJ UNIT PRICE	LAND VALUE	OTHER ADJUSTMENTS AND NOTES	YEAR	DENSITY	DECL	FRZ	YR	CONSRV
1	000100	C	RES	0		R-2	50.00	110.00	50.00	FF		1.00	1.00	0.96	7,500.00	7,200.00	360,000							

REVIEW DATE 01/06/2023 BY TWA Total Acres: 0.00 Total Land Value: 360,000 Market: 0 Agricultural: 0 Common: 360,000 PRINTED 07/30/2025 BY SYS