S100 FT OF LOT 67
IN OR 2608/1250
BUCKS FDNA BEACH #1 PB 2/30

COASTAL DEVELOPMENT OF AMELIA LLC
96398 HIGH POINTE DRIVE
FERNANDINA BEACH, FL 32034

2025

00-00-31-114A-0067-0080

NASSAU COUNTY PROPERTY

BUILDING CHARACTERISTICS

ELEMENT	CD	CONSTRUCTION
Exterior Wall	16	WD FR STUC 60
Exterior Wall	05	AVERAGE 40
Roof Structur	03	GABLE/HIP 100
Roof Cover	03	COMP SHNGL 100
Interior Wall	05	DRYWALL 100
Interior Floo	12	HARDWOOD 70
Interior Floo	11	CLAY TILE 30
Air Condition	03	CENTRAL 100
Heating Type	04	AIR DUCTED 100
Bedrooms		2 100
Bathrooms		2 100
Frame	02	WOOD FRAME 100
Stories	2.	2. 100
Units		0 100
BUD8 Adjustme	02	DIST FB 100
Quality	04	Quality Level 04
DOR CODE	0100	SINGLE FAMILY
MAP NUM		MKT AREA 01
NEIGHBORHOOD/LOC	1052.00	

AREA TYPE	TOTAL GROSS AREA	PCT OF BASE	YEAR	TOT ADJ AREA	SUBAREA MARKET VALUE
BAS	1,139	100	1993	1,139	210,396
BAS	192	100	1994	192	35,466
FOP	48	30	1993	14	2,586
FOP	140	30	1993	42	7,758
FOP	357	30	1993	107	19,765
FST	35	55	1993	19	3,509
FUS	700	100	1993	700	129,304
UGR	850	45	1993	382	70,563
UOP	300	20	1993	60	11,083
TOTALS	3,761			2,655	490,431

MARKET ADJUSTMENTS

TYPE	MDL	EFF. AREA	TOT ADJ PTS	EFF. BASE RATE	REPL. COST NEW	AYB	EYB	ECON	FNCT		NORM	% COND
0500	11	2,655	143.4470	226.65	601,756	1977	1985	0	0	0	18.50	81.50

1 SFR CUST – 0% - 2023 Heated Area: 2031 HX Base Yr

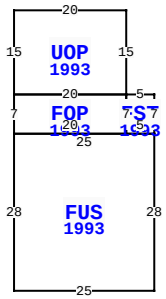

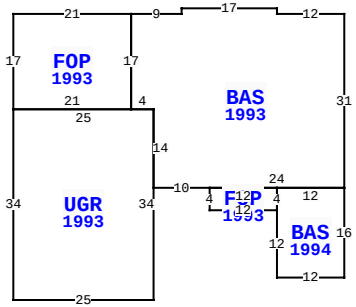

2890 S FLETCHER AVE, FERNANDINA BEACH

BLD DATE		LGL DATE	
XF DATE		LAND DATE	05/07/2025 MLU
INC DATE		AG DATE	

VALUATION SUMMARY

VALUATION BY	STANDARD
Tax Group: 2	Tax Dist:
BUILDING MARKET VALUE	394,686
TOTAL MARKET OB/XF VALUE	2,744
TOTAL LAND VALUE - MARKET	1,615,000
TOTAL MARKET VALUE	2,012,430
SOH/AGL Deduction	32,430
ASSESSED VALUE	1,980,000
TOTAL EXEMPTION VALUE	0
BASE TAXABLE VALUE	1,980,000
TOTAL JUST VALUE	2,012,430
NCON VALUE	0
INCOME VALUE	
PREVIOUS YEAR MKT VALUE	1,800,000

PERMIT NUM	DESCRIPTION	AMT	ISSUED
B002149	REPAIR/RRF	5,500	02/10/2000
6853	REPAIR/RRF	3,000	01/03/1992

SALES DATA

OFF RECORD Number	DATE	TYPE INST	Q / U	V / I	RSN CD	SALE PRICE
2608/1250	12/15/2022	WD	Q	I	01	2,265,000
GRANTOR: MOBLEY-MARTINEZ TRACY						
GRANTEE: COASTAL DEVELOPMENT						
2608/1239	12/14/2022	TD	U	I	11	100
GRANTOR: MOBLEY LYNN DIMOND RE						
GRANTEE: MOBLEY-MARTINEZ TRA						

BUILDING NOTES

BUILDING DIMENSIONS

BAS=[YR=1993] W12 N1 W17 S1 W9 FOP=[YR=1993] W21 S17
UGR=[YR=1993] S34 E25 N34 W25 $ E21 N17 $ S17 E4 S14 E10
FOP=[YR=1993] S4 E12 BAS=[YR=1994] S12 E12 N16 W12 S4 $ N4
W12 $ E24 N31 $ PTR= N15 FUS=[YR=1993] N28 FST=[YR=1993] N7
W5 UOP=[YR=1993] N15 W20 S15 FOP=[YR=1993] S7 E20 N7 W20 $
E20 $ S7 E5 $ W25 S28 E25 $ S15 $.

EXTRA FEATURES

LN	OB/XF CODE	DESCRIPTION	BLD	CAP	L	W	UNITS	UT	Adj R	ADJ UNIT PRICE	ORIG COND	YEAR ON	YEAR ACTUAL	Q	% COND	OB/XF MKT VALUE	NOTES
1	0500	FP-PRE FAB	0	0	0	0	1.00	UT	3,500.00	3,500.00	100	1977	1977	3	38	1,330	
2	0803	ASPHALT C	0	0	0	0	1,414.00	SF	2.00	2.00	100	1985	1985	3	50	1,414	

LAND DESCRIPTION

TOTAL OB/XF 2,744

LN	USE CODE	CLS	LAND USE DESCRIPTION	CAP	RD	LOC ZONE	FRONT	DEPTH	TOT LND UTS	UNIT TYPE	DT	DPTH FACT	% COND	TOT ADJ	UNIT PRICE	ADJ UNIT PRICE	LAND VALUE	OTHER ADJUSTMENTS AND NOTES	YEAR	DENSITY	DECL	FRZ	YR	CONSRV
1	000120	C	RES OCEAN	0		R-2	100.00	290.00	100.00	FF		1.00	1.00	0.85	19,000.00	16,150.00	1,615,000							

REVIEW DATE 05/12/2019 BY KBA Total Acres: 0.00 Total Land Value: 1,615,000 Market: 0 Agricultural: 0 Common: 1,615,000 PRINTED 07/30/2025 BY SYS