LOTS 30 & 31
IN OR 2084/1426
BUCKS FDNA BEACH #1 PB 2/30

COONROD ANNE T
3017 RIVERSIDE DR
FERNANDINA BEACH, FL 32034

2025

00-00-31-114A-0030-0000

BUILDING CHARACTERISTICS

ELEMENT	CD	CONSTRUCTION
Exterior Wall	16	WD FR STUC 70
Exterior Wall	05	AVERAGE 30
Roof Structur	03	GABLE/HIP 100
Roof Cover	03	COMP SHNGL 100
Interior Wall	04	PLYWOOD 50
Interior Wall	05	DRYWALL 50
Interior Floo	14	CARPET 90
Interior Floo	11	CLAY TILE 10
Air Condition	03	CENTRAL 100
Heating Type	04	AIR DUCTED 100
Bedrooms		3 100
Bathrooms		3 100
Frame	02	WOOD FRAME 100
Stories	2.5	2.5 100
Units		0 100
BUD8 Adjustme	02	DIST FB 100
Occupancy	00	NONE 100
Quality	03	Quality Level 03
DOR CODE	0100	SINGLE FAMILY
MAP NUM		MKT AREA 01
NEIGHBORHOOD/LOC	1058.00	

AREA TYPE	TOTAL GROSS AREA	PCT OF BASE	YEAR	TOT ADJ AREA	SUBAREA MARKET VALUE
BAS	1,280	100	1993	1,280	119,331
FOP	24	30	1993	7	652
FOP	60	30	1993	18	1,678
FUS	320	100	1993	320	29,833
FUS	1,280	100	1993	1,280	119,331
UOP	932	20	1993	186	17,340
UST	120	45	1993	54	5,035
TOTALS	4,016			3,145	293,200

MARKET ADJUSTMENTS

TYPE	MDL	EFF. AREA	TOT ADJ PTS	EFF. BASE RATE	REPL. COST NEW	AYB	EYB	ECON	FNCT		NORM	% COND
0900	01	3,145	99.7280	131.64	414,008	1936	1965	0	0	0	29.18	70.82

1 SNGL FAM – 0% - 0 Heated Area: 2880 HX Base Yr

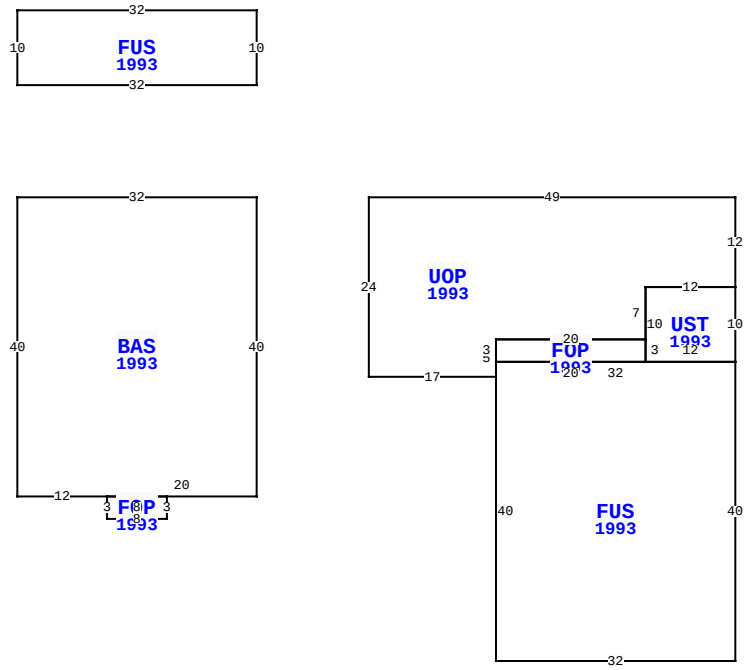

2519 S FLETCHER AVE, FERNANDINA BEACH

BLD DATE		LGL DATE	
XF DATE		LAND DATE	05/07/2025 MLU
INC DATE		AG DATE	

NASSAU COUNTY PROPERTY

PAGE 1 of 1 2

VALUATION SUMMARY

VALUATION BY	STANDARD
Tax Group: 2	Tax Dist:
BUILDING MARKET VALUE	293,200
TOTAL MARKET OB/XF VALUE	8,989
TOTAL LAND VALUE - MARKET	720,000
TOTAL MARKET VALUE	1,022,189
SOH/AGL Deduction	141,198
ASSESSED VALUE	880,991
TOTAL EXEMPTION VALUE	0
BASE TAXABLE VALUE	880,991
TOTAL JUST VALUE	1,022,189
NCON VALUE	0
INCOME VALUE	
PREVIOUS YEAR MKT VALUE	961,262

PERMIT NUM	DESCRIPTION	AMT	ISSUED
20100042	H/AC	1,200	01/12/2010
20100019	REPAIR/RRF	700	01/07/2010
20090059	H/AC	1,500	01/16/2009
20081835	H/AC	1,900	12/22/2008
B020158	REPAIR/RRF	3,000	01/31/2002
8017	XFOB	10,000	12/07/1993

SALES DATA

OFF RECORD Number	DATE	TYPE INST	Q / U	V / I	RSN CD	SALE PRICE
2084/1426	11/22/2016	WD	Q	I	01	420,000
GRANTOR: PORTER ANDREW M						
GRANTEE: COONROD ANNE T						
0843/1804	8/06/1998	WD	Q	I		196,000
GRANTOR: ROWLAND MARSHALL W &						
GRANTEE: PORTER ANDREW M						

BUILDING NOTES

BUILDING DIMENSIONS

BAS=[YR=1993] W32 S40 E12 FOP=[YR=1993] S3 E8 N3 W8 $ E20 N40 $ PTR= E15 UOP=[YR=1993] E49 S12 UST=[YR=1993] S10 FUS=[YR=1993] S40 W32 N40 FOP=[YR=1993] N3 E20 S3 W20 $ E32 $ W12 N10 E12 $ W12 S7 W20 S5 W17 N24 $ W15 $ PTR= N15 FUS=[YR=1993] N10 W32 S10 E32 $ S15 $.

EXTRA FEATURES

LN	OB/XF CODE	DESCRIPTION	BLD	CAP	L	W	UNITS	UT	Adj R	ADJ UNIT PRICE	ORIG COND	YEAR ON	YEAR ACTUAL	Q	% COND	OB/XF MKT VALUE	NOTES
1	0810	CONCRETE A	0	0	0	0	357.00	SF	6.50	6.50	100	1960	1960	3	20	464	
2	0812	CONCRETE C	0	0	0	0	3,037.00	SF	4.00	4.00	100	1993	1993	3	64	7,775	
3	0810	CONCRETE A	0	0	0	0	165.00	SF	6.50	6.50	100	1993	1993	3	64	686	
4	0810	CONCRETE A	0	0	5	3	15.00	SF	6.50	6.50	100	1994	1994	3	66	64	

LAND DESCRIPTION

TOTAL OB/XF 8,989

LN	USE CODE	CLS	LAND USE DESCRIPTION	CAP	RD	LOC ZONE	FRONT	DEPTH	TOT LND UTS	UNIT TYPE	DT	DPTH FACT	% COND	TOT ADJ	UNIT PRICE	ADJ UNIT PRICE	LAND VALUE	OTHER ADJUSTMENTS AND NOTES	YEAR	DENSITY	DECL	FRZ	YR	CONSRV
1	000100	C	RES	0		R-2	100.00	110.00	100.00	FF		1.00	1.00	0.96	7,500.00	7,200.00	720,000							

REVIEW DATE 03/26/2020 BY DJA Total Acres: 0.00 Total Land Value: 720,000 Market: 0 Agricultural: 0 Common: 720,000 PRINTED 07/30/2025 BY SYS