LOT 14
BUCKS FDNA BEACH 1 PB 2/30

DOGGETT SUZANNE D TRUST/DOGGETT WILLIAM B TRUSTEE
2478 S FLETCHER AVE
FERNANDINA BEACH, FL 32034

2025

00-00-31-114A-0014-0000

BUILDING CHARACTERISTICS

ELEMENT	CD	CONSTRUCTION
Exterior Wall	16	WD FR STUC 100
Roof Structur	03	GABLE/HIP 100
Roof Cover	03	COMP SHNGL 100
Interior Wall	05	DRYWALL 100
Interior Floo	12	HARDWOOD 100
Air Condition	03	CENTRAL 100
Heating Type	04	AIR DUCTED 100
Bedrooms		3 100
Bathrooms		3 100
Frame	02	WOOD FRAME 100
Stories	1.5	1.5 100
Units		0 100
BUD8 Adjustme	02	DIST FB 100
Occupancy	00	NONE 100
Quality	05	Quality Level 05
DOR CODE	0100	SINGLE FAMILY
MAP NUM		MKT AREA 01
NEIGHBORHOOD/LOC	1052.00	

AREA TYPE	TOTAL GROSS AREA	PCT OF BASE	YEAR	TOT ADJ AREA	SUBAREA MARKET VALUE
BAS	1,498	100	1993	1,498	457,531
BAS	288	100	2007	288	87,963
FOP	77	30	1993	23	7,025
FOP	80	30	1993	24	7,331
FUS	899	100	1993	899	274,580
PTO	50	5	2007	2	611
STP	20	10	2007	2	611
STR	42	10	2007	4	1,221
UGR	288	45	1993	130	39,706
UOP	56	20	1993	11	3,360
TOTALS	3,898			3,001	916,590

MARKET ADJUSTMENTS

TYPE	MDL	EFF. AREA	TOT ADJ PTS	EFF. BASE RATE	REPL. COST NEW	AYB	EYB	ECON	FNCT		NORM	% COND
0500	12	3,001	202.4184	319.82	959,780	1930	2015	0	0	0	4.50	95.50

1 SFR CUST – 100% - 2025 Heated Area: 2685 HX Base Yr 2025

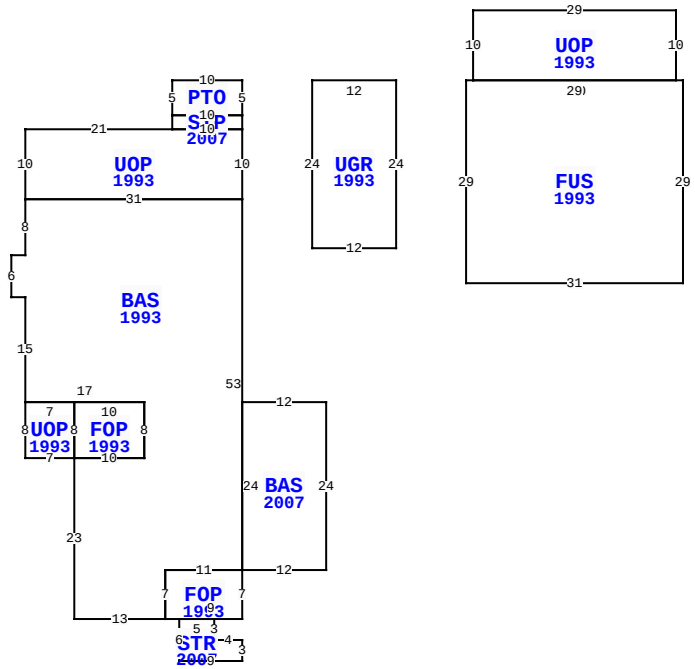

** This building has 12 Sub-Areas

2478 S FLETCHER AVE, FERNANDINA BEACH

BLD DATE		LGL DATE	
XF DATE		LAND DATE	05/07/2025 MLU
INC DATE		AG DATE	

NASSAU COUNTY PROPERTY

PAGE 1 of 1 2

VALUATION SUMMARY

VALUATION BY		STANDARD
Tax Group: 2	Tax Dist:	
BUILDING MARKET VALUE		916,590
TOTAL MARKET OB/XF VALUE		21,032
TOTAL LAND VALUE - MARKET		950,000
TOTAL MARKET VALUE		1,887,622
SOH/AGL Deduction		500,000
ASSESSED VALUE		1,387,622
TOTAL EXEMPTION VALUE	HX HB	50,722
BASE TAXABLE VALUE		1,336,900
TOTAL JUST VALUE		1,887,622
NCON VALUE		0
INCOME VALUE		
PREVIOUS YEAR MKT VALUE		1,671,352

PERMIT NUM	DESCRIPTION	AMT	ISSUED
20170375	REMODEL	48,000	02/09/2017
20070273	REPAIR/RRF	5,562	02/14/2007

SALES DATA

OFF RECORD Number	DATE	TYPE INST	Q U	V I	RSN CD	SALE PRICE
2698/239	3/06/2024	WD	Q	I	01	2,375,000
GRANTOR: WOOD ROBERT BARCLAY						
GRANTEE: DOGGETT SUZANNE D T						
1901/0235	2/01/2014	WD	U	I	11	100
GRANTOR: WOOD NETTIE SPENCE						
GRANTEE: WOOD ROBERT BARCLAY						

BUILDING NOTES

BUILDING DIMENSIONS

PTO=[YR=2007] W10 S5 STP=[YR=2007] S2 UOP=[YR=1993] W21 S10 BAS=[YR=1993] S8 W2 S6 E2 S15 UOP=[YR=1993] S8 E7 FOP=[YR=1993] E10 N8 W10 S8 $ N8 W7 $ E17 S8 W10 S23 E13 FOP=[YR=1993] E2 STR=[YR=2007] S6 E9 N3 W4 N3 W5 $ E9 N7 BAS=[YR=2007] E12 N24 W12 S24 $ W11 S7 $ N7 E11 N53 W31 $ E31 N10 W10 $ E10 N2 W10 $ E10 N5 $ PTR= E10 UGR=[YR=1993] E12 S24 W12 N24$ W10$ PTR= E32 FUS=[YR=1993] E1 UOP=[YR=1993] N10 E29 S10 W29$ E30 S29 W31 N29$ W32$.

EXTRA FEATURES

LN	OB/XF CODE	DESCRIPTION	BLD	CAP	L	W	UNITS	UT	Adj R	ADJ UNIT PRICE	ORIG COND	YEAR ON	YEAR ACTUAL	Q	% COND	OB/XF MKT VALUE	NOTES
1	0415	BEACHWALK	0	100	0	0	244.00	SF	5.75	5.75	100	1981	1981	3	20	281	
2	0810	CONCRETE A	0	100	48	4	192.00	SF	6.50	6.50	100	1984	1984	3	41	512	
3	0500	FP-PRE FAB	0	100	0	0	2.00	UT	3,500.00	3,500.00	100	1984	1984	3	54	3,780	
4	0858	SCULP CONC	0	100	0	0	1,061.00	SF	13.00	13.00	100	1992	1992	3	87	12,000	
5	0850	PEBBLE WLK	0	100	0	0	100.00	SF	3.50	3.50	100	1992	1992	3	62	217	
6	0415	BEACHWALK	0	100	100	4	400.00	SF	5.75	5.75	100	1997	1997	3	20	460	
7	1125	CB/STC 6"	0	100	0	0	830.00	SF	7.35	7.35	100	1992	1992	3	62	3,782	

LAND DESCRIPTION

TOTAL OB/XF 21,032

LN	USE CODE	CLS	LAND USE DESCRIPTION	CAP	RD	LOC ZONE	FRONT	DEPTH	TOT LND UTS	UNIT TYPE	DT	DPTH FACT	% COND	TOT ADJ	UNIT PRICE	ADJ UNIT PRICE	LAND VALUE	OTHER ADJUSTMENTS AND NOTES	YEAR	DENSITY	DECL	FRZ	YR	CONSRV
1	000120	C	RES OCEAN	100		R-2	50.00	290.00	50.00	FF		1.00	1.00	1.00	19,000.00	19,000.00	950,000							

REVIEW DATE 05/12/2019 BY KBA Total Acres: 0.00 Total Land Value: 950,000 Market: 0 Agricultural: 0 Common: 950,000 PRINTED 07/30/2025 BY SYS