LOT 2(EX OR 47 PG 528) &
PT OF LOT 1
IN OR 2057/1764

THOMPSON CHRISTOPHER L & SUSAN
8515 CONGRESSIONAL DR
TALLAHASSEE, FL 32312

2025

00-00-31-114A-0002-0000

NASSAU COUNTY PROPERTY

BUILDING CHARACTERISTICS

ELEMENT	CD	CONSTRUCTION
Exterior Wall	10	ABOVE AVG 50
Exterior Wall	16	WD FR STUC 50
Roof Structur	08	IRREGULAR 100
Roof Cover	11	SLATE 100
Interior Wall	05	DRYWALL 100
Interior Floo	11	CLAY TILE 70
Interior Floo	14	CARPET 30
Air Condition	03	CENTRAL 100
Heating Type	04	AIR DUCTED 100
Foundation	06	PIERS CONC 100
Bedrooms		5 100
Bathrooms		5.5 100
Frame	02	WOOD FRAME 100
Stories	3.	3. 100
Units		0 100
Quality	01	Quality Level 01
DOR CODE	0100	SINGLE FAMILY
MAP NUM		MKT AREA 01
NEIGHBORHOOD/LOC	1052.00	

AREA TYPE	TOTAL GROSS AREA	PCT OF BASE	YEAR	TOT ADJ AREA	SUBAREA MARKET VALUE
BAL	12	15	2010	2	1,074
BAL	20	15	2010	3	1,611
BAL	20	15	2010	3	1,611
BAL	68	15	2010	10	5,373
BAL	104	15	2010	16	8,597
BAS	784	100	2010	784	421,219
FGR	521	55	2010	287	154,196
FOP	60	30	2010	18	9,671
FOP	85	30	2010	26	13,969
FOP	208	30	2010	62	33,311
TOTALS	5,111			4,242	2,279,096

MARKET ADJUSTMENTS

TYPE	MDL	EFF. AREA	TOT ADJ PTS	EFF. BASE RATE	REPL. COST NEW	AYB	EYB	ECON	FNCT		NORM	% COND
0500	22	4,242	364.6572	576.16	2,444,071	2010	2010	0	0	0	6.75	93.25

2 SFR CUST – 0% - 0 Heated Area: 3705 HX Base Yr

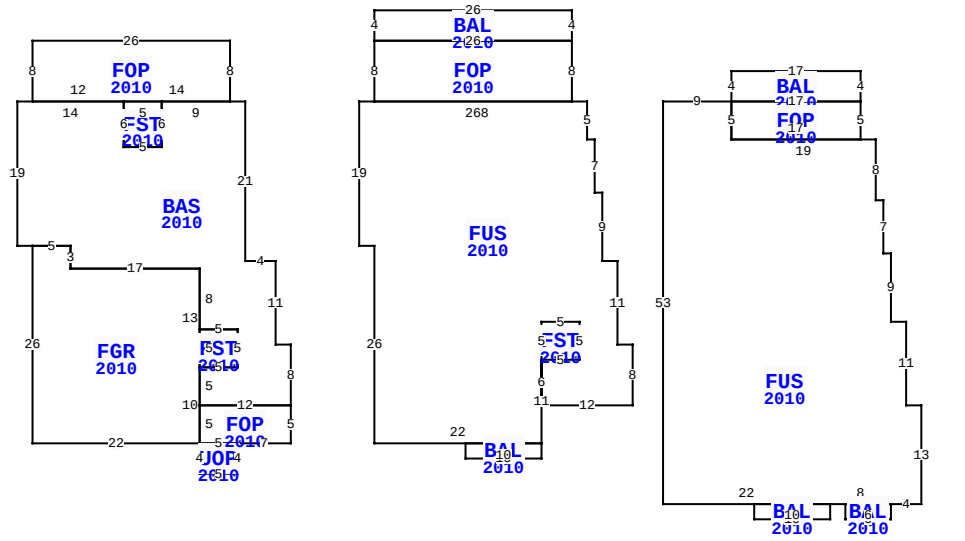

** This building has 17 Sub-Areas

2344 S FLETCHER AVE, FERNANDINA BEACH

BLD DATE		LGL DATE	
XF DATE		LAND DATE	05/07/2025 MLU
INC DATE		AG DATE	

VALUATION SUMMARY

VALUATION BY	STANDARD
Tax Group: 2	Tax Dist:
BUILDING MARKET VALUE	2,279,096
TOTAL MARKET OB/XF VALUE	52,727
TOTAL LAND VALUE - MARKET	950,000
TOTAL MARKET VALUE	3,281,823
SOH/AGL Deduction	0
ASSESSED VALUE	3,281,823
TOTAL EXEMPTION VALUE	0
BASE TAXABLE VALUE	3,281,823
TOTAL JUST VALUE	3,281,823
NCON VALUE	0
INCOME VALUE	
PREVIOUS YEAR MKT VALUE	3,055,981

PERMIT NUM	DESCRIPTION	AMT	ISSUED
20101327	XFOB	5,000	08/10/2010
20100531	GAS	1,095	03/31/2010
20100467	H/AC	14,665	03/19/2010
20091690	OTHER	12,000	12/11/2009
20091673	ELEC OTHER	4,650	12/09/2009
20091635	XFOB	40,000	12/03/2009

SALES DATA

OFF RECORD Number	DATE	TYPE INST	Q U	V I	RSN CD	SALE PRICE
2057/1764	7/08/2016	WD	Q	I	01	2,300,000
GRANTOR: SPIVEY PROPERTY MANAG						
GRANTEE: THOMPSON CHRISTOPHE						
1587/1093	9/30/2008	WD	Q	I	02	940,000
GRANTOR: 2344 SOUTH FLETCHER L						
GRANTEE: SPIVEY PROPERTY MAN						

BUILDING NOTES

BUILDING DIMENSIONS

BAS=[YR=2010] W2 FOP=[YR=2010] N8W26S8E12 FST=[YR=2010] S6 E5 N6 W5$ E14$ W9 S6 W5 N6 W14 S19 E2 FGR=[YR=2010] S26E22 UOP=[YR=2010] S4E5N4FOP=[YR=2010] E7N5W12S5E5$ W5$ N10 FST=[YR=2010] E5N5W5S5$ N13W17N3W5$ E5S3E17 S8E5S5W5S5E12N8W2N11W4N21$ PTR=E15 FUS=[YR=2010] E2 FOP=[YR=2010] N8 BAL=[YR=2010] N4E26S4W26$E26S8W26$ E28S5E1S7E1S9E2S11E2S8W12N6 FST=[YR=2010] N5E5S5W5$S11 BAL=[YR=2010] S2W10N2E10$ W22N26W2N19$ W15$ PTR=E55 FUS=[YR=2010] E9 BAL=[YR=2010] N4 E17S4W17$ FOP=[YR=2010] E17S5W17N5$ S5E19 S8 E1S7E1S9E2S11E2S13 W4 BAL=[YR=2010] S2W6N2E6$ W8 BAL=[YR=2010] S2W10N2E10$ W22N53$ W55$.

EXTRA FEATURES

LN	OB/XF CODE	DESCRIPTION	BLD	CAP	L	W	UNITS	UT	Adj R	ADJ UNIT PRICE	ORIG COND	YEAR ON	YEAR ACTUAL	Q	% COND	OB/XF MKT VALUE	NOTES
1	0350	CARPORT WD	0	0	12	12	144.00	SF	9.88	9.88	100	1986	1986	3	20	285	
2	0416	DUNEWALKS	0	0	0	0	976.00	SF	30.00	30.00	100	2009	2009	3	35	10,248	
3	0855	CONC PAVER	0	0	0	0	1,450.00	SF	10.00	10.00	100	2010	2010	3	90	13,050	
4	0855	CONC PAVER	0	0	58	3	174.00	SF	10.00	10.00	100	2010	2010	3	90	1,566	
5	0855	CONC PAVER	0	0	0	0	625.00	SF	10.00	10.00	100	2010	2010	3	90	5,625	
6	0861	POOL GUNIT	0	0	0	0	305.00	SF	85.00	85.00	100	2010	2010	3	56	14,518	
7	0871	POOL HTR R	0	0	0	0	1.00	UT	2,000.00	2,000.00	100	2010	2010	3	40	800	
8	0476	VF 6 SBPL	0	0	0	0	78.00	LF	32.00	32.00	100	2010	2010	3	76	1,897	
9	0470	VNYL GATE	0	0	0	0	3.00	UT	300.00	300.00	100	2010	2010	3	76	684	
10	0479	VF PICKET	0	0	0	0	44.00	LF	10.00	10.00	100	2010	2010	3	76	334	

TOTAL OB/XF 49,007

LAND DESCRIPTION

LN	USE CODE	CLS	LAND USE DESCRIPTION	CAP	RD	LOC ZONE	FRONT	DEPTH	TOT LND UTS	UNIT TYPE	DT	DPTH FACT	% COND	TOT ADJ	UNIT PRICE	ADJ UNIT PRICE	LAND VALUE	OTHER ADJUSTMENTS AND NOTES	YEAR	DENSITY	DECL	FRZ	YR	CONSRV
1	000120	C	RES OCEAN	0		R-2	50.00	290.00	50.00	FF		1.00	1.00	1.00	19,000.00	19,000.00	950,000							

REVIEW DATE 03/31/2020 BY DJA Total Acres: 0.00 Total Land Value: 950,000 Market: 0 Agricultural: 0 Common: 950,000 PRINTED 07/30/2025 BY SYS

LOT 2(EX OR 47 PG 528) &
PT OF LOT 1
IN OR 2057/1764

THOMPSON CHRISTOPHER L & SUSAN
8515 CONGRESSIONAL DR
TALLAHASSEE, FL 32312

2025

00-00-31-114A-0002-0000

NASSAU COUNTY PROPERTY

BUILDING CHARACTERISTICS

ELEMENT	CD	CONSTRUCTION

DOR CODE	0100	SINGLE FAMILY	
MAP NUM		MKT AREA	01
NEIGHBORHOOD/LOC	1052.00		

AREA TYPE	TOTAL GROSS AREA	PCT OF BASE	YEAR	TOT ADJ AREA	SUBAREA MARKET VALUE
TOTALS					

MARKET ADJUSTMENTS

TYPE	MDL	EFF. AREA	TOT ADJ PTS	EFF. BASE RATE	REPL. COST NEW	AYB	EYB	ECON	FNCT		NORM	% COND

VALUATION SUMMARY

VALUATION BY	STANDARD
Tax Group: 2	Tax Dist:
BUILDING MARKET VALUE	2,279,096
TOTAL MARKET OB/XF VALUE	52,727
TOTAL LAND VALUE - MARKET	950,000
TOTAL MARKET VALUE	3,281,823
SOH/AGL Deduction	0
ASSESSED VALUE	3,281,823
TOTAL EXEMPTION VALUE	0
BASE TAXABLE VALUE	3,281,823
TOTAL JUST VALUE	3,281,823
NCON VALUE	0
INCOME VALUE	
PREVIOUS YEAR MKT VALUE	3,055,981

PERMIT NUM	DESCRIPTION	AMT	ISSUED
20091636	SWIM POOL	30,000	12/03/2009
20091637	ELEC OTHER	1,400	12/03/2009
20091638	OTHER	1,000	12/03/2009
20091643	FOUNDATION	700,000	12/03/2009
20091645	REPAIR/RRF	16,200	12/03/2009
20091037	DEMOLITION	2,000	08/05/2009

SALES DATA

OFF RECORD Number	DATE	TYPE INST	Q / U	V / I	RSN CD	SALE PRICE
2057/1764	7/08/2016	WD	Q	I	01	2,300,000
GRANTOR: SPIVEY PROPERTY MANAG						
GRANTEE: THOMPSON CHRISTOPHE						
1587/1093	9/30/2008	WD	Q	I	02	940,000
GRANTOR: 2344 SOUTH FLETCHER L						
GRANTEE: SPIVEY PROPERTY MAN						

BLD DATE		LGL DATE	
XF DATE		LAND DATE	05/07/2025 MLU
INC DATE		AG DATE	

BUILDING NOTES

BUILDING DIMENSIONS

EXTRA FEATURES

LN	OB/XF CODE	DESCRIPTION	BLD	CAP	L	W	UNITS	UT	Adj R	ADJ UNIT PRICE	ORIG COND	YEAR ON	YEAR ACTUAL	Q	% COND	OB/XF MKT VALUE	NOTES
11	0504	FP-ELECTRI	0	0	0	0	2.00	UT	2,000.00	2,000.00	100	2010	2010	3	93	3,720	

LAND DESCRIPTION

TOTAL OB/XF 3,720

LN	USE CODE	CLS	LAND USE DESCRIPTION	CAP	RD	LOC ZONE	FRONT	DEPTH	TOT LND UTS	UNIT TYPE	DT	DPTH FACT	% COND	TOT ADJ	UNIT PRICE	ADJ UNIT PRICE	LAND VALUE	OTHER ADJUSTMENTS AND NOTES	YEAR	DENSITY	DECL	FRZ	YR	CONSRV

REVIEW DATE 03/31/2020 BY DJA Total Acres: 0.00 Total Land Value: 950,000 Market: 0 Agricultural: 0 Common: 950,000 PRINTED 07/30/2025 BY SYS