LOT 24
IN OR 1437/356
BEACH HAMMOCK PB 5/154

CABELL JOHN W & LORI Z
2801 RACHEAL AV
FERNANDINA BEACH, FL 32034

2025

00-00-31-1110-0024-0000

NASSAU COUNTY PROPERTY

BUILDING CHARACTERISTICS

ELEMENT	CD	CONSTRUCTION
Exterior Wall	16	WD FR STUC 90
Exterior Wall	10	ABOVE AVG 10
Roof Structur	03	GABLE/HIP 100
Roof Cover	03	COMP SHNGL 100
Interior Wall	05	DRYWALL 100
Interior Floo	12	HARDWOOD 50
Interior Floo	15	HARDTILE 50
Air Condition	03	CENTRAL 100
Heating Type	04	AIR DUCTED 100
Bedrooms		5 100
Bathrooms		5 100
Frame	02	WOOD FRAME 100
Stories	2.	2. 100
Units		0 100
Occupancy	00	NONE 100
Quality	03	Quality Level 03
DOR CODE	0100	SINGLE FAMILY
MAP NUM		MKT AREA 01
NEIGHBORHOOD/LOC	1062.00	

AREA TYPE	TOTAL GROSS AREA	PCT OF BASE	YEAR	TOT ADJ AREA	SUBAREA MARKET VALUE
BAL	108	15	2011	16	1,975
BAL	138	15	2011	21	2,592
BAS	824	100	1993	824	101,706
BAS	778	100	2002	778	96,028
FDG	416	60	2009	250	30,858
FGR	476	55	1993	262	32,338
FOP	91	30	1993	27	3,333
FOP	96	30	2009	29	3,579
FST	50	55	2002	28	3,456
FUS	1,056	100	1993	1,056	130,342
TOTALS	5,099			4,134	510,259

MARKET ADJUSTMENTS

TYPE	MDL	EFF. AREA	TOT ADJ PTS	EFF. BASE RATE	REPL. COST NEW	AYB	EYB	ECON	FNCT		NORM	% COND
0900	01	4,134	105.6000	139.39	576,238	1992	2001	0	0	0	11.45	88.55

1 SNGL FAM – 100% - 2007 Heated Area: 3486 HX Base Yr 2007

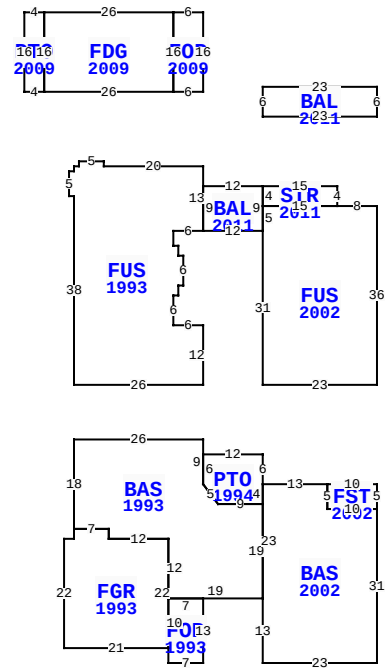

** This building has 14 Sub-Areas

2801 RACHEAL AVE, FERNANDINA BEACH

BLD DATE		LGL DATE	
XF DATE		LAND DATE	03/21/2024 MLU
INC DATE		AG DATE	

VALUATION SUMMARY

VALUATION BY		STANDARD
Tax Group: 2	Tax Dist:	
BUILDING MARKET VALUE		510,259
TOTAL MARKET OB/XF VALUE		22,288
TOTAL LAND VALUE - MARKET		215,000
TOTAL MARKET VALUE		747,547
SOH/AGL Deduction		363,703
ASSESSED VALUE		383,844
TOTAL EXEMPTION VALUE	HX HB	50,722
BASE TAXABLE VALUE		333,122
TOTAL JUST VALUE		747,547
NCON VALUE		0
INCOME VALUE		
PREVIOUS YEAR MKT VALUE		723,485

PERMIT NUM	DESCRIPTION	AMT	ISSUED
BLDR-2024-0		4,845	01/23/2024
BLDR-2023-0	Complete building		11/20/2023
20111293	ROOF DECK & STAIR	2,000	08/03/2011
20081363	DETACHED GARAGE	10,000	09/04/2008
20081364	.5 BATH IN DET.GA	1,000	09/04/2008
20081365	ELEC. FOR GARAGE	1,000	09/04/2008

SALES DATA

OFF RECORD Number	DATE	TYPE INST	Q / U	V / I	RSN CD	SALE PRICE
1437/0356	8/15/2006	WD	Q	I		510,000
GRANTOR: RADTKE DEAN W & LINDA						
GRANTEE: CABELL JOHN W & LOR						
0857/1848	12/04/1998	WD	Q	I	01	169,000
GRANTOR: RADTKE WAYNE L & AGNE						
GRANTEE: RADTKE DEAN W & LIN						

BUILDING NOTES

BUILDING DIMENSIONS

FUS=[YR=1993] W20N1W5S1 W1S1W1S5E1 S38E26 N12W6N6 E1N2 E1N6 W1N2 W1N3E6 BAL=[YR=2011] E12 FUS=[YR=2002] S31E23N36W8 STR=[YR=2011] N4W15S4E15 $ W15S5$ N9W12S9$ N13$ PTR=S55 BAS=[YR=1993] W26S18 FGR=[YR=1993] S2W2 S22E21 FOP=[YR=1993] S3E7N13W7S10$ N22W12N2W7$ E7S2E12S12 E19 BAS=[YR=2002] S13E23N31 FST=[YR=2002] N5 W10S5E10$ W10N5W13 PTO=[YR=1994] N6 W12S6 D4 R3 E9N4$ S23$ N19W9 L3 U4 N9$ N55$ PTR=E12N10 BAL=[YR=2011] E23N6W23S6$ S10W12$ PTR=N15 FOP=[YR=2009] N16W6 FDG=[YR=2009] W26 PTO=[YR=2009] W4S16E4N16$ S16E26 N16$ S16E6$ S15$.

EXTRA FEATURES

LN	OB/XF CODE	DESCRIPTION	BLD	CAP	L	W	UNITS	UT	Adj R	ADJ UNIT PRICE	ORIG COND	YEAR ON	YEAR ACTUAL	Q	% COND	OB/XF MKT VALUE	NOTES
1	0500	FP-PRE FAB	0	100	0	0	1.00	UT	3,500.00	3,500.00	100	1992	1992	3	70	2,450	
2	0810	CONCRETE A	0	100	0	0	671.00	SF	6.50	6.50	100	1992	1992	3	62	2,704	
3	0810	CONCRETE A	0	100	0	0	443.00	SF	6.50	6.50	100	1998	1998	3	73	2,102	
4	0810	CONCRETE A	0	100	38	3	114.00	SF	6.50	6.50	100	2009	2009	3	89	659	
5	0855	CONC PAVER	0	100	0	0	1,054.00	SF	10.00	10.00	100	2024	2023		100	10,540	
6	0476	VF 6 SBPL	0	100	0	0	121.00	LF	32.00	32.00	100	2024	2023		99	3,833	

LAND DESCRIPTION

TOTAL OB/XF 22,288

LN	USE CODE	CLS	LAND USE DESCRIPTION	CAP	RD	LOC ZONE	FRONT	DEPTH	TOT LND UTS	UNIT TYPE	DT	DPTH FACT	% COND	TOT ADJ	UNIT PRICE	ADJ UNIT PRICE	LAND VALUE	OTHER ADJUSTMENTS AND NOTES	YEAR	DENSITY	DECL	FRZ	YR	CONSRV
1	000100	C	RES	100	0003	R-1	100.00	85.00	1.00	LT		1.00	1.00	1.00	215,000.00	215,000.00	215,000							

REVIEW DATE 02/12/2024 BY DJA Total Acres: 0.00 Total Land Value: 215,000 Market: 0 Agricultural: 0 Common: 215,000 PRINTED 07/30/2025 BY SYS