BLOCK 23 LOT 12
IN OR 1628/389
AMELIA PARK PHASE 2 UNIT 8

CHAUDET STEPHEN E & JUNE B
2168 21ST COURT NORTH
ARLINGTON, VA 22201

2025

00-00-31-102P-0023-0120

BUILDING CHARACTERISTICS

ELEMENT	CD	CONSTRUCTION
Exterior Wall	10	ABOVE AVG 100
Roof Structur	08	IRREGULAR 100
Roof Cover	12	MODULAR MT 90
Roof Cover	01	MINIMUM 10
Interior Wall	05	DRYWALL 100
Interior Floo	12	HARDWOOD 80
Interior Floo	15	HARDTILE 20
Air Condition	03	CENTRAL 100
Heating Type	04	AIR DUCTED 100
Bedrooms		4 100
Bathrooms		4 100
Frame	02	WOOD FRAME 100
Stories	1.5	1.5 100
Units		0 100
Occupancy	00	NONE 100
Quality	03	Quality Level 03
DOR CODE	0100	SINGLE FAMILY
MAP NUM		MKT AREA 01
NEIGHBORHOOD/LOC	1031.00	

AREA TYPE	TOTAL GROSS AREA	PCT OF BASE	YEAR	TOT ADJ AREA	SUBAREA MARKET VALUE
BAS	1,734	100	2008	1,734	372,004
FDG	529	60	2008	317	68,008
FUS	852	100	2008	852	182,784
PTO	70	5	2008	4	858
STR	16	10	2008	2	429
STR	18	10	2008	2	429
UOP	480	20	2008	96	20,595
USP	130	30	2008	39	8,367
TOTALS	3,829			3,046	653,475

MARKET ADJUSTMENTS

TYPE	MDL	EFF. AREA	TOT ADJ PTS	EFF. BASE RATE	REPL. COST NEW	AYB	EYB	ECON	FNCT		NORM	% COND
0500	11	3,046	146.7917	231.93	706,459	2008	2008	0	0	0	7.50	92.50

1 SFR CUST – 0% - 0 Heated Area: 2586 HX Base Yr

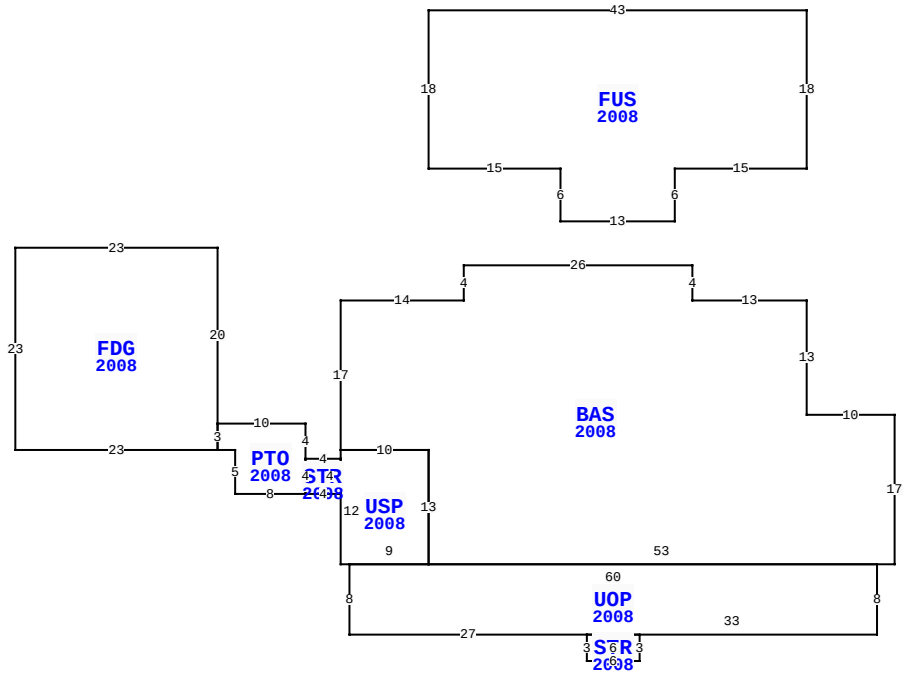

1790 HEATHER ST, FERNANDINA BEACH

BLD DATE		LGL DATE	
XF DATE		LAND DATE	05/08/2025 MLU
INC DATE		AG DATE	

NASSAU COUNTY PROPERTY

PAGE 1 of 1 2

VALUATION SUMMARY

VALUATION BY	STANDARD
Tax Group: 2	Tax Dist:
BUILDING MARKET VALUE	653,475
TOTAL MARKET OB/XF VALUE	4,266
TOTAL LAND VALUE - MARKET	250,000
TOTAL MARKET VALUE	907,741
SOH/AGL Deduction	61,679
ASSESSED VALUE	846,062
TOTAL EXEMPTION VALUE	0
BASE TAXABLE VALUE	846,062
TOTAL JUST VALUE	907,741
NCON VALUE	0
INCOME VALUE	
PREVIOUS YEAR MKT VALUE	828,063

PERMIT NUM	DESCRIPTION	AMT	ISSUED
20080579	OTHER	1,800	04/11/2008
20071943	GAS	495	10/12/2007
20070830	ELEC OTHER	6,500	05/15/2007
20070837	H/AC	11,300	05/15/2007
20070632	OTHER	7,200	04/16/2007
20070211	CO ISSUED	236,075	02/06/2007

SALES DATA

OFF RECORD Number	DATE	TYPE INST	Q / U	V / I	RSN CD	SALE PRICE
1628/0389	7/06/2009	WD	Q	I	01	600,000
GRANTOR: LANE GREGORY R						
GRANTEE: CHAUDET STEPHEN E &						
1351/1612	9/22/2005	WD	Q	V		80,000
GRANTOR: AMELIA PARK DEVELOPME						
GRANTEE: LANE GREGORY R						

BUILDING NOTES

BUILDING DIMENSIONS

BAS=[YR=2008] W13N4W26S4W14S17 USP=[YR=2008] S1 STR=[YR=2008] W4 PTO=[YR=2008] N4W10 FDG=[YR=2008] N20W23S23E23N3$ S3E2S5E8N4$S4E4N4$S12E1 UOP=[YR=2008] S8E27 STR=[YR=2008] S3E6N3W6 $ E33N8W60$E9N13W10$ E10S13E53 N17W10N13$ PTR=N15 FUS=[YR=2008] N18 W43S18 E15S6E13N6E15$S15$.

EXTRA FEATURES

LN	OB/XF CODE	DESCRIPTION	BLD	CAP	L	W	UNITS	UT	Adj R	ADJ UNIT PRICE	ORIG COND	YEAR ON	YEAR ACTUAL	Q	% COND	OB/XF MKT VALUE	NOTES
1	0500	FP-PRE FAB	0	0	0	0	1.00	UT	3,500.00	3,500.00	100	2008	2008	3	91	3,185	
2	0810	CONCRETE A	0	0	9	21	189.00	SF	6.50	6.50	100	2008	2008	3	88	1,081	

LAND DESCRIPTION

TOTAL OB/XF 4,266

LN	USE CODE	CLS	LAND USE DESCRIPTION	CAP	RD	LOC ZONE	FRONT	DEPTH	TOT LND UTS	UNIT TYPE	DT	DPTH FACT	% COND	TOT ADJ	UNIT PRICE	ADJ UNIT PRICE	LAND VALUE	OTHER ADJUSTMENTS AND NOTES	YEAR	DENSITY	DECL	FRZ	YR	CONSRV
1	000100	C	RES	0		R-2	0.00	0.00	50.00	FF		1.00	1.00	1.00	5,000.00	5,000.00	250,000							

REVIEW DATE 05/12/2019 BY KBA Total Acres: 0.00 Total Land Value: 250,000 Market: 0 Agricultural: 0 Common: 250,000 PRINTED 07/30/2025 BY SYS