BLOCK 20 LOT 11
AMELIA PARK PHASE 2 UNIT 8
PB 6/391

MARKOWSKI KAREN O & PAUL A
1775 NEIGHBOR STREET
FERNANDINA BEACH, FL 32034

2025

00-00-31-102P-0020-0110

NASSAU COUNTY PROPERTY

BUILDING CHARACTERISTICS

ELEMENT	CD	CONSTRUCTION
Exterior Wall	10	ABOVE AVG 100
Roof Structur	08	IRREGULAR 100
Roof Cover	03	COMP SHNGL 100
Interior Wall	05	DRYWALL 100
Interior Floo	14	CARPET 70
Interior Floo	15	HARDTILE 30
Air Condition	03	CENTRAL 100
Heating Type	04	AIR DUCTED 100
Bedrooms		3 100
Bathrooms		2.5 100
Frame	02	WOOD FRAME 100
Stories	1.	1. 100
Units		0 100
Occupancy	00	NONE 100
Quality	03	Quality Level 03

DOR CODE 0100 SINGLE FAMILY
MAP NUM | MKT AREA 01
NEIGHBORHOOD/LOC 1031.00

AREA TYPE	TOTAL GROSS AREA	PCT OF BASE	YEAR	TOT ADJ AREA	SUBAREA MARKET VALUE
BAS	2,312	100	2005	2,312	461,621
FDG	420	60	2005	252	50,315
FOP	8	30	2005	2	399
FOP	86	30	2005	26	5,192
FOP	168	30	2005	50	9,984
FOP	174	30	2005	52	10,382
PTO	60	5	2005	3	599
TOTALS	3,228			2,697	538,492

MARKET ADJUSTMENTS

TYPE	MDL	EFF. AREA	TOT ADJ PTS	EFF. BASE RATE	REPL. COST NEW	AYB	EYB	ECON	FNCT		NORM	% COND
0500	11	2,697	138.8669	219.41	591,749	2005	2005	0	0	0	9.00	91.00

1 SFR CUST – 100% - 2024 Heated Area: 2312 HX Base Yr 2024

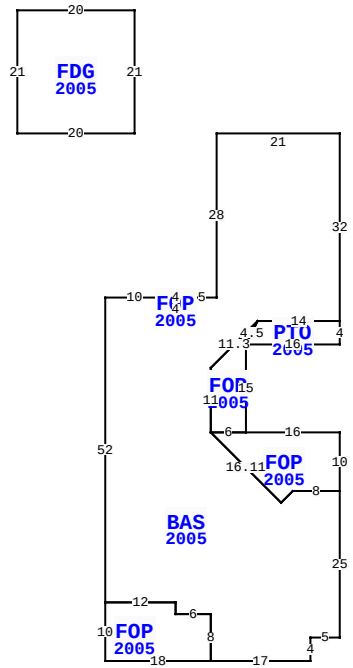

1775 NEIGHBOR ST, FERNANDINA BEACH

BLD DATE		LGL DATE	
XF DATE		LAND DATE	05/08/2025 MLU
INC DATE		AG DATE	

NASSAU COUNTY PROPERTY — VALUATION SUMMARY

VALUATION BY		STANDARD
Tax Group: 2	Tax Dist:	
BUILDING MARKET VALUE		538,492
TOTAL MARKET OB/XF VALUE		18,308
TOTAL LAND VALUE - MARKET		300,000
TOTAL MARKET VALUE		856,800
SOH/AGL Deduction		269,634
ASSESSED VALUE		587,166
TOTAL EXEMPTION VALUE	HX HB	50,722
BASE TAXABLE VALUE		536,444
TOTAL JUST VALUE		856,800
NCON VALUE		0
INCOME VALUE		
PREVIOUS YEAR MKT VALUE		772,723

PERMIT NUM	DESCRIPTION	AMT	ISSUED
2023-0414	911-202*20	11,000	08/23/2023
20051365	NEW CONSTR	1,000	03/07/2005
20051257	NEW CONSTR	2,000	02/16/2005
20051174	NEW CONSTR	172,000	02/03/2005

SALES DATA

OFF RECORD Number	DATE	TYPE INST	Q / U	V / I	RSN CD	SALE PRICE
2625/1586	3/15/2023	WD	Q	I	02	780,000
GRANTOR: LOTZ KARELYN H						
GRANTEE: MARKOWSKI KAREN O &						
1279/1557	12/09/2004	WD	Q	V		77,900
GRANTOR: BRYLEN HOMES LTD						
GRANTEE: LOTZ KARELYN H & WI						

BUILDING NOTES

BUILDING DIMENSIONS

BAS=[YR=2005] W21 S28 W5 FOP=[YR=2005] W4 S2 E4 N2$S2 W4 N2 W10 S52 FOP=[YR=2005] S10 E18 N8 W6 N2 W12$ E12 S2 E6 S8 E17 N4 E5 N25 FOP=[YR=2005] N10 W16 FOP=[YR=2005] N15 PTO=[YR=2005] E16N4W14 D4 L2 $ U4 R2 L8 D8 S11E6$W6 D12 R12 U2 R2 E8 $ W8 D2 L2 L12 U12 N11 U8 R8 E14 N32$ PTR=W35 FDG=[YR=2005] N21 W20 S21 E20$E35$.

EXTRA FEATURES

LN	OB/XF CODE	DESCRIPTION	BLD	CAP	L	W	UNITS	UT	Adj R	ADJ UNIT PRICE	ORIG COND	YEAR ON	YEAR ACTUAL	Q	% COND	OB/XF MKT VALUE	NOTES
1	0500	FP-PRE FAB	0	100	0	0	1.00	UT	3,500.00	3,500.00	100	2005	2005	3	88	3,080	
2	0810	CONCRETE A	0	100	0	0	1,035.00	SF	6.50	6.50	100	2005	2005	3	84	5,651	
3	0825	BRICK	0	100	3	6	18.00	SF	25.00	25.00	100	2005	2005	3	96	432	
4	0476	VF 6 SBPL	0	100	0	0	44.00	LF	32.00	32.00	100	2005	2005	3	64	901	
5	0470	VNYL GATE	0	100	0	0	1.00	UT	300.00	300.00	100	2005	2005	3	64	192	
6	0911	SCRN RM A	0	100	0	0	340.00	SF	17.50	17.50	100	2024	2023		97	5,772	
7	0855	CONC PAVER	0	100	0	0	84.00	SF	10.00	10.00	100	2024	2023		100	840	
8	0855	CONC PAVER	0	100	0	0	144.00	SF	10.00	10.00	100	2024	2023		100	1,440	

LAND DESCRIPTION

TOTAL OB/XF 18,308

LN	USE CODE	CLS	LAND USE DESCRIPTION	CAP	RD	LOC ZONE	FRONT	DEPTH	TOT LND UTS	UNIT TYPE	DT	DPTH FACT	% COND	TOT ADJ	UNIT PRICE	ADJ UNIT PRICE	LAND VALUE	OTHER ADJUSTMENTS AND NOTES	YEAR	DENSITY	DECL	FRZ	YR	CONSRV
1	000100	C	RES	100		R-2	0.00	0.00	60.00	FF		1.00	1.00	1.00	5,000.00	5,000.00	300,000							

REVIEW DATE 02/07/2024 BY DJ Total Acres: 0.00 Total Land Value: 300,000 Market: 0 Agricultural: 0 Common: 300,000 PRINTED 07/30/2025 BY SYS