BLOCK 19 LOT 3
AMELIA PARK PHASE 2 UNIT 8
PB 6/391

RAWSON CHARLES A
1895 HOMETOWN DR
FERNANDINA BEACH, FL 32034

2025

00-00-31-102P-0019-0030

BUILDING CHARACTERISTICS

ELEMENT	CD	CONSTRUCTION
Exterior Wall	10	ABOVE AVG 100
Roof Structur	08	IRREGULAR 100
Roof Cover	03	COMP SHNGL 100
Interior Wall	05	DRYWALL 100
Interior Floo	15	HARDTILE 70
Interior Floo	14	CARPET 30
Air Condition	03	CENTRAL 100
Heating Type	04	AIR DUCTED 100
Bedrooms		3 100
Bathrooms		2 100
Frame	02	WOOD FRAME 100
Stories	1.	1. 100
Units		0 100
Occupancy	00	NONE 100
Quality	03	Quality Level 03
DOR CODE	0100	SINGLE FAMILY
MAP NUM		MKT AREA 01
NEIGHBORHOOD/LOC	1031.00	

AREA TYPE	TOTAL GROSS AREA	PCT OF BASE	YEAR	TOT ADJ AREA	SUBAREA MARKET VALUE
BAS	2,231	100	2005	2,231	461,873
FGR	394	55	2005	217	44,925
FOP	170	30	2005	51	10,559
FOP	258	30	2005	77	15,941
PTO	120	5	2005	6	1,242
TOTALS	3,173			2,582	534,539

MARKET ADJUSTMENTS

TYPE	MDL	EFF. AREA	TOT ADJ PTS	EFF. BASE RATE	REPL. COST NEW	AYB	EYB	ECON	FNCT		NORM	% COND
0500	11	2,582	143.9875	227.50	587,405	2005	2005	0	0	0	9.00	91.00

1 SFR CUST – 100% - 2025 Heated Area: 2231 HX Base Yr 2025

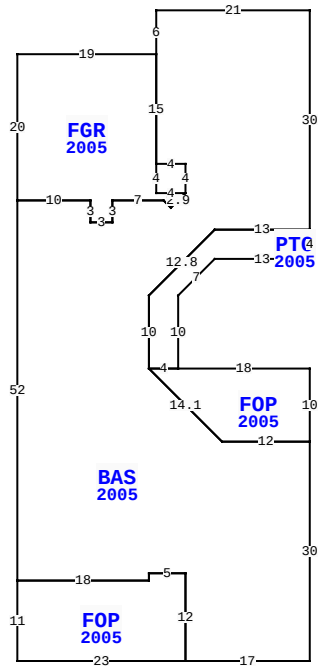

1895 HOMETOWN DR, FERNANDINA BEACH

BLD DATE		LGL DATE	
XF DATE		LAND DATE	05/08/2025 MLU
INC DATE		AG DATE	

NASSAU COUNTY PROPERTY

PAGE 1 of 2 2

VALUATION SUMMARY

VALUATION BY		STANDARD
Tax Group: 2	Tax Dist:	
BUILDING MARKET VALUE		534,539
TOTAL MARKET OB/XF VALUE		17,281
TOTAL LAND VALUE - MARKET		350,000
TOTAL MARKET VALUE		901,820
SOH/AGL Deduction		0
ASSESSED VALUE		901,820
TOTAL EXEMPTION VALUE	HX HB WR	55,722
BASE TAXABLE VALUE		846,098
TOTAL JUST VALUE		901,820
NCON VALUE		0
INCOME VALUE		
PREVIOUS YEAR MKT VALUE		808,304

PERMIT NUM	DESCRIPTION	AMT	ISSUED
20052571	XFOB	6,000	08/30/2005
20052291	GAS	1,000	07/25/2005
20052223	SWIM POOL	13,000	07/14/2005
20052224	NEW CONSTR	1,000	07/14/2005
20051906	H/AC	7,000	06/06/2005
20051736	NEW CONSTR	6,000	05/05/2005

SALES DATA

OFF RECORD Number	DATE	TYPE INST	Q U	V I	RSN CD	SALE PRICE
2440/0736	3/08/2021	WD	Q	I	01	670,000
GRANTOR: WIGGINS ROBERT L SR &						
GRANTEE: RAWSON CHARLES A &						
2284/1035	6/21/2019	WD	Q	I	01	575,000
GRANTOR: FINDLEY CURTIS KENT &						
GRANTEE: WIGGINS ROBERT L SR						

BUILDING NOTES

BUILDING DIMENSIONS

BAS=[YR=2005] W21 S6 FGR=[YR=2005] W19 S20 E10 S3 E3 N3 E7 D1 R1 U2 R2 W4N4N15$ S15E4S4 D2 L2 U1 L1 W7 S3W3N3W10 S52 FOP=[YR=2005] S11 E23 N12 W5 S1 W18$E18 N1 E5 S12 E17 N30 FOP=[YR=2005] N10 W18 PTO=[YR=2005] N10 U5 R5 E13N4W13 L9 D9 S10E4$W4 D10 R10 E12$ W12 U10 L10 N10 U9 R9 E13N30$.

EXTRA FEATURES

LN	OB/XF CODE	DESCRIPTION	BLD	CAP	L	W	UNITS	UT	Adj R	ADJ UNIT PRICE	ORIG COND	YEAR ON	YEAR ACTUAL	Q	% COND	OB/XF MKT VALUE	NOTES
1	0500	FP-PRE FAB	0	100	0	0	1.00	UT	3,500.00	3,500.00	100	2005	2005	3	88	3,080	
2	0825	BRICK	0	100	18	4	72.00	SF	12.50	12.50	100	2005	2005	3	96	864	
3	0861	POOL GUNIT	0	100	0	0	100.00	SF	85.00	85.00	100	2005	2005	3	36	3,060	
4	0877	JACUZZI	0	100	0	0	1.00	UT	1,000.00	1,000.00	100	2005	2005	3	22	220	
5	0871	POOL HTR R	0	100	0	0	1.00	UT	2,000.00	2,000.00	100	2005	2005	3	22	440	
6	0855	CONC PAVER	0	100	0	0	130.00	SF	10.00	10.00	100	2005	2005	3	84	1,092	
7	0911	SCRN RM A	0	100	23	16	368.00	SF	17.50	17.50	100	2005	2005	3	22	1,417	
8	1131	REINFR 8	0	100	29	2	58.00	SF	9.45	9.45	100	2005	2005	3	96	526	
9	0810	CONCRETE A	0	100	17	16	272.00	SF	7.48	7.48	100	2005	2005	3	84	1,708	
10	0810	CONCRETE A	0	100	23	11	253.00	SF	7.80	7.80	100	2005	2005	3	84	1,658	

TOTAL OB/XF 14,065

LAND DESCRIPTION

LN	USE CODE	CLS	LAND USE DESCRIPTION	CAP	RD	LOC ZONE	FRONT	DEPTH	TOT LND UTS	UNIT TYPE	DT	DPTH FACT	% COND	TOT ADJ	UNIT PRICE	ADJ UNIT PRICE	LAND VALUE	OTHER ADJUSTMENTS AND NOTES	YEAR	DENSITY	DECL	FRZ	YR	CONSRV
1	000100	C	RES	100		R-2	0.00	0.00	70.00	FF		1.00	1.00	1.00	5,000.00	5,000.00	350,000							

REVIEW DATE 05/12/2019 BY KBA Total Acres: 0.00 Total Land Value: 350,000 Market: 0 Agricultural: 0 Common: 350,000 PRINTED 07/30/2025 BY SYS

BLOCK 19 LOT 3
AMELIA PARK PHASE 2 UNIT 8
PB 6/391

RAWSON CHARLES A
1895 HOMETOWN DR
FERNANDINA BEACH, FL 32034

2025

00-00-31-102P-0019-0030

NASSAU COUNTY PROPERTY

BUILDING CHARACTERISTICS

ELEMENT	CD	CONSTRUCTION

DOR CODE	0100	SINGLE FAMILY	
MAP NUM		MKT AREA	01
NEIGHBORHOOD/LOC	1031.00		

AREA TYPE	TOTAL GROSS AREA	PCT OF BASE	YEAR	TOT ADJ AREA	SUBAREA MARKET VALUE
TOTALS					

MARKET ADJUSTMENTS

TYPE	MDL	EFF. AREA	TOT ADJ PTS	EFF. BASE RATE	REPL. COST NEW	AYB	EYB	ECON	FNCT		NORM	% COND

VALUATION SUMMARY

VALUATION BY		STANDARD
Tax Group: 2	Tax Dist:	
BUILDING MARKET VALUE		534,539
TOTAL MARKET OB/XF VALUE		17,281
TOTAL LAND VALUE - MARKET		350,000
TOTAL MARKET VALUE		901,820
SOH/AGL Deduction		0
ASSESSED VALUE		901,820
TOTAL EXEMPTION VALUE	HX HB WR	55,722
BASE TAXABLE VALUE		846,098
TOTAL JUST VALUE		901,820
NCON VALUE		0
INCOME VALUE		
PREVIOUS YEAR MKT VALUE		808,304

PERMIT NUM	DESCRIPTION	AMT	ISSUED
20051719	NEW CONSTR	2,000	05/02/2005
20051623	NEW CONSTR	199,000	04/18/2005
20051625	DEMOLITION	1,000	04/18/2005

SALES DATA

OFF RECORD Number	DATE	TYPE INST	Q U /	V I /	RSN CD	SALE PRICE
2440/0736	3/08/2021	WD	Q	I	01	670,000
GRANTOR: WIGGINS ROBERT L SR &						
GRANTEE: RAWSON CHARLES A &						
2284/1035	6/21/2019	WD	Q	I	01	575,000
GRANTOR: FINDLEY CURTIS KENT &						
GRANTEE: WIGGINS ROBERT L SR						

BLD DATE		LGL DATE	
XF DATE		LAND DATE	05/08/2025 MLU
INC DATE		AG DATE	

BUILDING NOTES

BUILDING DIMENSIONS

EXTRA FEATURES

LN	OB/XF CODE	DESCRIPTION	BLD	CAP	L	W	UNITS	UT	Adj R	ADJ UNIT PRICE	ORIG COND	YEAR ON	YEAR ACTUAL	Q	% COND	OB/XF MKT VALUE	NOTES
11	0810	CONCRETE A	0	100	25	3	75.00	SF	6.50	6.50	100	2005	2005	3	84	410	
12	0810	CONCRETE A	0	100	14	4	56.00	SF	6.50	6.50	100	2005	2005	3	84	306	
13	0476	VF 6 SBPL	0	100	0	0	98.00	LF	36.80	36.80	100	2005	2005	3	64	2,308	
14	0470	VNYL GATE	0	100	0	0	1.00	UT	300.00	300.00	100	2005	2005	3	64	192	

LAND DESCRIPTION

TOTAL OB/XF 3,216

LN	USE CODE	CLS	LAND USE DESCRIPTION	CAP	RD	LOC ZONE	FRONT	DEPTH	TOT LND UTS	UNIT TYPE	DT	DPTH FACT	% COND	TOT ADJ	UNIT PRICE	ADJ UNIT PRICE	LAND VALUE	OTHER ADJUSTMENTS AND NOTES	YEAR	DENSITY	DECL	FRZ	YR	CONSRV

REVIEW DATE 05/12/2019 BY KBA Total Acres: 0.00 Total Land Value: 350,000 Market: 0 Agricultural: 0 Common: 350,000 PRINTED 07/30/2025 BY SYS