BLOCK 19 LOT 2
AMELIA PARK PHASE 2 UNIT 8
PB 6/391

BARRONTON SCOTT A & MELISSA CAREY
1865 HOMETOWN DRIVE
FERNANDINA BEACH, FL 32034

2025

00-00-31-102P-0019-0020

BUILDING CHARACTERISTICS

ELEMENT	CD	CONSTRUCTION
Exterior Wall	10	ABOVE AVG 100
Roof Structur	04	WOOD TRUSS 100
Roof Cover	03	COMP SHNGL 100
Interior Wall	05	DRYWALL 100
Interior Floo	13	LVT/LAMNT 80
Interior Floo	14	CARPET 20
Air Condition	03	CENTRAL 100
Heating Type	04	AIR DUCTED 100
Bedrooms		3 100
Bathrooms		2.5 100
Frame	02	WOOD FRAME 100
Stories	2.	2. 100
Units		0 100
Occupancy	00	NONE 100
Quality	03	Quality Level 03
DOR CODE	0100	SINGLE FAMILY
MAP NUM		MKT AREA 01
NEIGHBORHOOD/LOC	1031.00	

AREA TYPE	TOTAL GROSS AREA	PCT OF BASE	YEAR	TOT ADJ AREA	SUBAREA MARKET VALUE
BAS	1,511	100	2022	1,511	317,422
FGR	580	55	2022	319	67,013
FOP	224	30	2022	67	14,075
FOP	363	30	2022	109	22,898
FUS	800	100	2022	800	168,059
TOTALS	3,478			2,806	589,469

MARKET ADJUSTMENTS

TYPE	MDL	EFF. AREA	TOT ADJ PTS	EFF. BASE RATE	REPL. COST NEW	AYB	EYB	ECON	FNCT		NORM	% COND
0500	11	2,806	133.6243	211.13	592,431	2022	2022	0	0	0	0.50	99.50

1 SFR CUST – 100% - 2023 Heated Area: 2311 HX Base Yr 2023

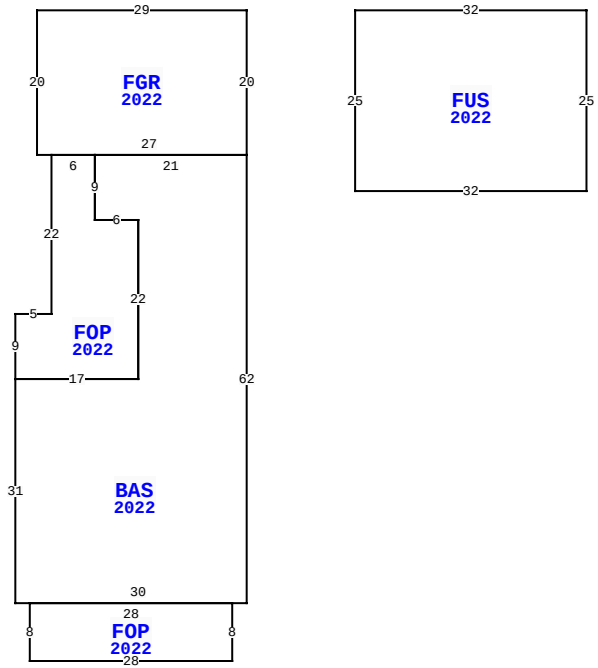

1865 HOMETOWN DR, FERNANDINA BEACH

BLD DATE		LGL DATE	
XF DATE		LAND DATE	05/08/2025 MLU
INC DATE		AG DATE	

NASSAU COUNTY PROPERTY

PAGE 1 of 1 2

VALUATION SUMMARY

VALUATION BY		STANDARD
Tax Group: 2	Tax Dist:	
BUILDING MARKET VALUE		589,469
TOTAL MARKET OB/XF VALUE		6,023
TOTAL LAND VALUE - MARKET		350,000
TOTAL MARKET VALUE		945,492
SOH/AGL Deduction		225,962
ASSESSED VALUE		719,530
TOTAL EXEMPTION VALUE	HX HB	50,722
BASE TAXABLE VALUE		668,808
TOTAL JUST VALUE		945,492
NCON VALUE		0
INCOME VALUE		
PREVIOUS YEAR MKT VALUE		848,519

PERMIT NUM	DESCRIPTION	AMT	ISSUED
20200927	NEW CONSTR	0	03/05/2021

SALES DATA

OFF RECORD Number	DATE	TYPE INST	Q / U	V / I	RSN CD	SALE PRICE
2575/1905	6/30/2022	WD	Q	I	01	884,000
GRANTOR: TARINI MARY JO RESTAT						
GRANTEE: BARRONTON SCOTT ALA						
2377/0762	7/17/2020	WD	Q	V	01	192,000
GRANTOR: CRAWFORD RICHARD						
GRANTEE: TARINI MARY JO REST						

BUILDING NOTES

BUILDING DIMENSIONS

FGR=[YR=2022] W29 S20 E2 FOP=[YR=2022] S22 W5 S9
BAS=[YR=2022] S31 E2 FOP=[YR=2022] S8 E28 N8 W28$ E30 N62
W21 S9 E6 S22 W17$ E17 N22 W6 N9 W6$ E27 N20$ PTR=E15
FUS=[YR=2022] E32 S25 W32 N25$ W15$.

EXTRA FEATURES

LN	OB/XF CODE	DESCRIPTION	BLD	CAP	L	W	UNITS	UT	Adj R	ADJ UNIT PRICE	ORIG COND	YEAR ON	YEAR ACTUAL	Q	% COND	OB/XF MKT VALUE	NOTES
1	0810	CONCRETE A	0	100	0	0	48.00	SF	6.50	6.50	100	2022	2022	3	99	309	
2	0810	CONCRETE A	0	100	0	0	230.00	SF	6.50	6.50	100	2022	2022	3	99	1,480	
3	0855	CONC PAVER	0	100	0	0	360.00	SF	10.00	10.00	100	2022	2022	3	99	3,564	
4	0476	VF 6 SBPL	0	100	0	0	12.00	LF	32.00	32.00	100	2022	2022	3	98	376	
5	0470	VNYL GATE	0	100	0	0	1.00	UT	300.00	300.00	100	2022	2022	3	98	294	

LAND DESCRIPTION

TOTAL OB/XF 6,023

LN	USE CODE	CLS	LAND USE DESCRIPTION	CAP	RD	LOC ZONE	FRONT	DEPTH	TOT LND UTS	UNIT TYPE	DT	DPTH FACT	% COND	TOT ADJ	UNIT PRICE	ADJ UNIT PRICE	LAND VALUE	OTHER ADJUSTMENTS AND NOTES	YEAR	DENSITY	DECL	FRZ	YR	CONSRV
1	000100	C	RES	100		R-2	0.00	0.00	70.00	FF		1.00	1.00	1.00	5,000.00	5,000.00	350,000							

REVIEW DATE 08/03/2022 BY DJ Total Acres: 0.00 Total Land Value: 350,000 Market: 0 Agricultural: 0 Common: 350,000 PRINTED 07/30/2025 BY SYS