BLOCK 15 LOT 10 & PT LOT 9
IN OR 2458/3844
AMELIA PARK PHASE 1 UNIT 6

MCPHILLIPS DOROTHY MUNSELL/PRAGER ROBERT DARRELL
1891 FIELD ST
FERNANDINA BEACH, FL 32034

2025

00-00-31-102P-0015-0100

BUILDING CHARACTERISTICS

ELEMENT	CD	CONSTRUCTION
Exterior Wall	10	ABOVE AVG 100
Roof Structur	08	IRREGULAR 100
Roof Cover	03	COMP SHNGL 100
Interior Wall	05	DRYWALL 100
Interior Floo	15	HARDTILE 60
Interior Floo	12	HARDWOOD 40
Air Condition	03	CENTRAL 100
Heating Type	04	AIR DUCTED 100
Bedrooms		3 100
Bathrooms		2.5 100
Frame	02	WOOD FRAME 100
Stories	1.	1. 100
Units		0 100
Occupancy	00	NONE 100
Quality	03	Quality Level 03
DOR CODE	0100	SINGLE FAMILY
MAP NUM		MKT AREA 01
NEIGHBORHOOD/LOC	1031.00	

AREA TYPE	TOTAL GROSS AREA	PCT OF BASE	YEAR	TOT ADJ AREA	SUBAREA MARKET VALUE
BAS	2,323	100	2003	2,323	482,492
FGR	392	55	2003	216	44,863
FOP	174	30	2003	52	10,801
FOP	315	30	2003	94	19,524
PTO	146	5	2003	7	1,454
TOTALS	3,350			2,692	559,134

MARKET ADJUSTMENTS

TYPE	MDL	EFF. AREA	TOT ADJ PTS	EFF. BASE RATE	REPL. COST NEW	AYB	EYB	ECON	FNCT		NORM	% COND
0500	11	2,692	146.0602	230.78	621,260	2003	2003	0	0	0	10.00	90.00

1 SFR CUST – 100% - 2022 Heated Area: 2323 HX Base Yr 2022

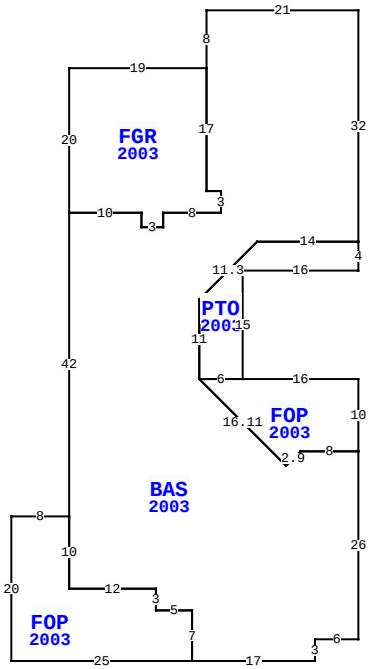

1891 FIELD ST, FERNANDINA BEACH

BLD DATE		LGL DATE	
XF DATE		LAND DATE	05/08/2025 MLU
INC DATE		AG DATE	

NASSAU COUNTY PROPERTY

PAGE 1 of 2 2

VALUATION SUMMARY

VALUATION BY		STANDARD
Tax Group: 2	Tax Dist:	
BUILDING MARKET VALUE		559,134
TOTAL MARKET OB/XF VALUE		18,342
TOTAL LAND VALUE - MARKET		250,000
TOTAL MARKET VALUE		827,476
SOH/AGL Deduction		204,906
ASSESSED VALUE		622,570
TOTAL EXEMPTION VALUE	HX HB	50,722
BASE TAXABLE VALUE		571,848
TOTAL JUST VALUE		827,476
NCON VALUE		0
INCOME VALUE		
PREVIOUS YEAR MKT VALUE		752,680

PERMIT NUM	DESCRIPTION	AMT	ISSUED
20110966	GAS	600	06/15/2011
20033117	XFOB	5,000	05/19/2003
20032575	SWIM POOL	13,000	02/25/2003
20021775	NEW CONSTR	182,000	10/14/2002

SALES DATA

OFF RECORD Number	DATE	TYPE INST	Q / U	V / I	RSN CD	SALE PRICE
2458/0384	4/26/2021	WD	Q	I	02	749,000
GRANTOR: HENTIGAN MICHAEL D &						
GRANTEE: MCPHILLIPS DOROTHY						
1271/0663	11/04/2004	WD	Q	V	06	54,000
GRANTOR: BRYLEN HOMES LTD						
GRANTEE: HENTIGAN MICHAEL D						

BUILDING NOTES

BUILDING DIMENSIONS

BAS=[YR=2003] W21 S8 FGR=[YR=2003] W19 S20 E10 S2 E3 N2 E8 N3 W2 N17 $ S17 E2 S3 W8 S2 W3 N2 W10 S42 FOP=[YR=2003] W8 S20 E25 N7 W5 N3 W12 N10 $ S10 E12 S3 E5 S7 E17 N3 E6 N26 FOP=[YR=2003] N10 W16 PTO=[YR=2003] N15E16N4W14 L8 D8 S11 E6$W6 D12 R12 U2 R2 E8$ W8 D2 L2 U12 L12 N11 U8 R8 E14N32$.

EXTRA FEATURES

LN	OB/XF CODE	DESCRIPTION	BLD	CAP	L	W	UNITS	UT	Adj R	ADJ UNIT PRICE	ORIG COND	YEAR ON	YEAR ACTUAL	Q	% COND	OB/XF MKT VALUE	NOTES
1	0500	FP-PRE FAB	0	100	0	0	1.00	UT	3,500.00	3,500.00	100	2003	2003	3	86	3,010	
2	0810	CONCRETE A	0	100	19	5	95.00	SF	6.50	6.50	100	2003	2003	3	82	506	
3	0810	CONCRETE A	0	100	0	0	955.00	SF	6.50	6.50	100	2003	2003	3	82	5,090	
4	0861	POOL GUNIT	0	100	13	9	117.00	SF	85.00	85.00	100	2003	2003	3	29	2,884	
5	0855	CONC PAVER	0	100	0	0	278.00	SF	10.00	10.00	100	2003	2003	3	82	2,280	
6	0910	SCRN RM L	0	100	0	0	541.00	SF	15.00	15.00	100	2003	2003	3	20	1,623	
7	1126	CB/STC 8"	0	100	31	8	248.00	SF	8.00	8.00	100	2003	2003	3	82	1,627	
8	0819	CONC 12"	0	100	4	6	24.00	SF	9.50	9.50	100	2003	2003	3	82	187	
9	0819	CONC 12"	0	100	3	5	15.00	SF	9.50	9.50	100	2003	2003	3	82	117	
10	0476	VF 6 SBPL	0	100	0	0	35.00	LF	32.00	32.00	100	2003	2003	3	58	650	

TOTAL OB/XF 17,974

LAND DESCRIPTION

LN	USE CODE	CLS	LAND USE DESCRIPTION	CAP	RD	LOC ZONE	FRONT	DEPTH	TOT LND UTS	UNIT TYPE	DT	DPTH FACT	% COND	TOT ADJ	UNIT PRICE	ADJ UNIT PRICE	LAND VALUE	OTHER ADJUSTMENTS AND NOTES	YEAR	DENSITY	DECL	FRZ	YR	CONSRV
1	000100	C	RES	100		R-2	0.00	0.00	50.00	FF		1.00	1.00	1.00	5,000.00	5,000.00	250,000							

REVIEW DATE 05/12/2019 BY KBA Total Acres: 0.00 Total Land Value: 250,000 Market: 0 Agricultural: 0 Common: 250,000 PRINTED 07/30/2025 BY SYS

BLOCK 15 LOT 10 & PT LOT 9
IN OR 2458/3844
AMELIA PARK PHASE 1 UNIT 6

MCPHILLIPS DOROTHY MUNSELL/PRAGER ROBERT DARRELL
1891 FIELD ST
FERNANDINA BEACH, FL 32034

2025

00-00-31-102P-0015-0100

NASSAU COUNTY PROPERTY

BUILDING CHARACTERISTICS

ELEMENT	CD	CONSTRUCTION

DOR CODE	0100	SINGLE FAMILY	
MAP NUM		MKT AREA	01
NEIGHBORHOOD/LOC	1031.00		

AREA TYPE	TOTAL GROSS AREA	PCT OF BASE	YEAR	TOT ADJ AREA	SUBAREA MARKET VALUE
TOTALS					

MARKET ADJUSTMENTS

TYPE	MDL	EFF. AREA	TOT ADJ PTS	EFF. BASE RATE	REPL. COST NEW	AYB	EYB	ECON	FNCT		NORM	% COND

VALUATION SUMMARY

VALUATION BY		STANDARD
Tax Group: 2	Tax Dist:	
BUILDING MARKET VALUE		559,134
TOTAL MARKET OB/XF VALUE		18,342
TOTAL LAND VALUE - MARKET		250,000
TOTAL MARKET VALUE		827,476
SOH/AGL Deduction		204,906
ASSESSED VALUE		622,570
TOTAL EXEMPTION VALUE	HX HB	50,722
BASE TAXABLE VALUE		571,848
TOTAL JUST VALUE		827,476
NCON VALUE		0
INCOME VALUE		
PREVIOUS YEAR MKT VALUE		752,680

PERMIT NUM	DESCRIPTION	AMT	ISSUED

SALES DATA

OFF RECORD Number	DATE	TYPE INST	Q U /	V I /	RSN CD	SALE PRICE
2458/0384	4/26/2021	WD	Q	I	02	749,000
GRANTOR: HENTIGAN MICHAEL D &						
GRANTEE: MCPHILLIPS DOROTHY						
1271/0663	11/04/2004	WD	Q	V	06	54,000
GRANTOR: BRYLEN HOMES LTD						
GRANTEE: HENTIGAN MICHAEL D						

BLD DATE		LGL DATE	
XF DATE		LAND DATE	05/08/2025 MLU
INC DATE		AG DATE	

BUILDING NOTES

BUILDING DIMENSIONS

EXTRA FEATURES

LN	OB/XF CODE	DESCRIPTION	BLD	CAP	L	W	UNITS	UT	Adj R	ADJ UNIT PRICE	ORIG COND	YEAR ON	YEAR ACTUAL	Q	% COND	OB/XF MKT VALUE	NOTES
11	0470	VNYL GATE	0	100	0	0	1.00	UT	300.00	300.00	100	2003	2003	3	58	174	
12	0810	CONCRETE A	0	100	12	3	36.00	SF	6.50	6.50	100	2004	2004	3	83	194	

LAND DESCRIPTION

TOTAL OB/XF 368

LN	USE CODE	CLS	LAND USE DESCRIPTION	CAP	RD	LOC ZONE	FRONT	DEPTH	TOT LND UTS	UNIT TYPE	DT	DPTH FACT	% COND	TOT ADJ	UNIT PRICE	ADJ UNIT PRICE	LAND VALUE	OTHER ADJUSTMENTS AND NOTES	YEAR	DENSITY	DECL	FRZ	YR	CONSRV

REVIEW DATE 05/12/2019 BY KBA Total Acres: 0.00 Total Land Value: 250,000 Market: 0 Agricultural: 0 Common: 250,000 PRINTED 07/30/2025 BY SYS