BLOCK 7 LOT 5
IN OR 1023/1055
AMELIA PARK PHASE 1 UNIT 3

CLEMENS MICHAEL N & MARY A
1705 LAKE PARK DRIVE
FERNANDINA BEACH, FL 32034

2025

00-00-31-102P-0007-0050

NASSAU COUNTY PROPERTY

BUILDING CHARACTERISTICS

ELEMENT	CD	CONSTRUCTION
Exterior Wall	10	ABOVE AVG 100
Roof Structur	08	IRREGULAR 100
Roof Cover	03	COMP SHNGL 70
Roof Cover	12	MODULAR MT 30
Interior Wall	05	DRYWALL 100
Interior Floo	12	HARDWOOD 80
Interior Floo	15	HARDTILE 20
Air Condition	03	CENTRAL 100
Heating Type	04	AIR DUCTED 100
Bedrooms		3 100
Bathrooms		2.5 100
Frame	02	WOOD FRAME 100
Stories	1.5	1.5 100
Units		0 100
Occupancy	00	NONE 100
Quality	03	Quality Level 03
DOR CODE	0100	SINGLE FAMILY
MAP NUM		MKT AREA 01
NEIGHBORHOOD/LOC	1031.00	

AREA TYPE	TOTAL GROSS AREA	PCT OF BASE	YEAR	TOT ADJ AREA	SUBAREA MARKET VALUE
BAS	1,696	100	2004	1,696	328,403
FDG	660	60	2004	396	76,679
FOP	250	30	2004	75	14,523
FUS	960	100	2004	960	185,889
PTO	200	5	2004	10	1,937
USP	230	30	2004	69	13,361
TOTALS	3,996			3,206	620,790

MARKET ADJUSTMENTS

TYPE	MDL	EFF. AREA	TOT ADJ PTS	EFF. BASE RATE	REPL. COST NEW	AYB	EYB	ECON	FNCT		NORM	% COND
0500	11	3,206	135.4176	213.96	685,956	2004	2004	0	0	0	9.50	90.50

1 SFR CUST – 100% - 2005 Heated Area: 2656 HX Base Yr 2005

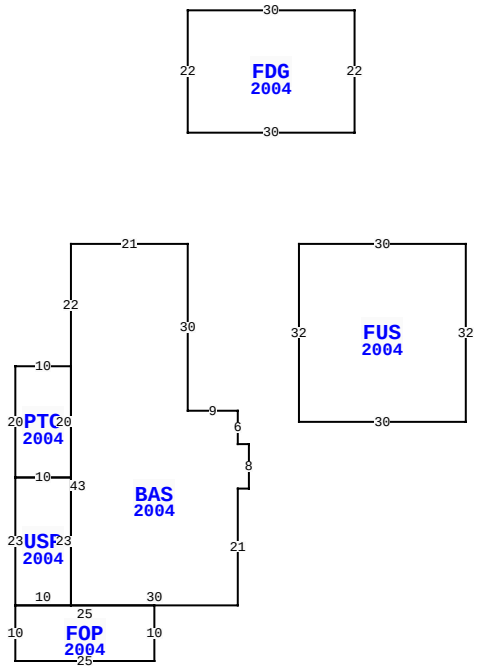

1705 LAKE PARK DR, FERNANDINA BEACH

BLD DATE		LGL DATE	
XF DATE		LAND DATE	05/08/2025 MLU
INC DATE		AG DATE	

VALUATION SUMMARY

VALUATION BY		STANDARD
Tax Group: 2	Tax Dist:	
BUILDING MARKET VALUE		620,790
TOTAL MARKET OB/XF VALUE		7,895
TOTAL LAND VALUE - MARKET		375,000
TOTAL MARKET VALUE		1,003,685
SOH/AGL Deduction		584,092
ASSESSED VALUE		419,593
TOTAL EXEMPTION VALUE	HX HB	50,722
BASE TAXABLE VALUE		368,871
TOTAL JUST VALUE		1,003,685
NCON VALUE		0
INCOME VALUE		
PREVIOUS YEAR MKT VALUE		840,666

PERMIT NUM	DESCRIPTION	AMT	ISSUED
20051534	XFOB	2,000	04/08/2005
20042333	OTHER	1,000	12/13/2004
20040861	NEW CONSTR	192,000	05/10/2004

SALES DATA

OFF RECORD Number	DATE	TYPE INST	Q U	V I	RSN CD	SALE PRICE
1023/1055	12/06/2001	WD	Q	V		74,000

GRANTOR: AMELIA PARK DEVELOPME

GRANTEE: CLEMENS MICHAEL N &

BUILDING NOTES

BUILDING DIMENSIONS

BAS=[YR=2004] W21 S22 PTO=[YR=2004] W10 S20 USP=[YR=2004] S23 FOP=[YR=2004] S10 E25 N10 W25$ E10 N23 W10$ E10 N20$ S43 E30 N21 E2 N8 W2 N6 W9 N30$ PTR=E20 FUS=[YR=2004] E30 S32 W30 N32$ W20$ PTR=N20 FDG=[YR=2004] N22 E30 S22 W30$ S20$.

EXTRA FEATURES

LN	OB/XF CODE	DESCRIPTION	BLD	CAP	L	W	UNITS	UT	Adj R	ADJ UNIT PRICE	ORIG COND	YEAR ON	YEAR ACTUAL	Q	% COND	OB/XF MKT VALUE	NOTES
1	0500	FP-PRE FAB	0	100	0	0	1.00	UT	3,500.00	3,500.00	100	2004	2004	3	87	3,045	
2	0819	CONC 12"	0	100	2	8	16.00	SF	9.50	9.50	100	2004	2004	3	83	126	
3	0810	CONCRETE A	0	100	55	3	165.00	SF	6.50	6.50	100	2004	2004	3	83	890	
4	0810	CONCRETE A	0	100	73	3	219.00	SF	6.50	6.50	100	2004	2004	3	83	1,182	
5	0810	CONCRETE A	0	100	16	22	352.00	SF	6.50	6.50	100	2004	2004	3	83	1,899	
6	0819	CONC 12"	0	100	6	9	54.00	SF	4.75	4.75	100	2004	2004	3	83	213	
7	1076	TRELLIS A	0	100	10	10	100.00	SF	15.00	15.00	100	2005	2005	3	36	540	

LAND DESCRIPTION

TOTAL OB/XF 7,895

LN	USE CODE	CLS	LAND USE DESCRIPTION	CAP	RD	LOC ZONE	FRONT	DEPTH	TOT LND UTS	UNIT TYPE	DT	DPTH FACT	% COND	TOT ADJ	UNIT PRICE	ADJ UNIT PRICE	LAND VALUE	OTHER ADJUSTMENTS AND NOTES	YEAR	DENSITY	DECL	FRZ	YR	CONSRV
1	000134	C	RES POND	100		R-2	0.00	0.00	60.00	FF		1.00	1.00	1.25	5,000.00	6,250.00	375,000							

REVIEW DATE 05/12/2019 BY KBA Total Acres: 0.00 Total Land Value: 375,000 Market: 0 Agricultural: 0 Common: 375,000 PRINTED 07/30/2025 BY SYS