BLOCK 6 LOT 9A
AMELIA PARK PHASE 1 UNIT 1
PB 6/114-115

CASTOR DRU ELLEN/CASTOR FORREST JOSEPH
1886 CARNATION ST
FERNANDINA BEACH, FL 32034

2025

00-00-31-102P-0006-09A0

BUILDING CHARACTERISTICS

ELEMENT	CD	CONSTRUCTION
Exterior Wall	16	WD FR STUC 100
Roof Structur	03	GABLE/HIP 100
Roof Cover	03	COMP SHNGL 100
Interior Wall	05	DRYWALL 100
Interior Floo	14	CARPET 70
Interior Floo	11	CLAY TILE 30
Air Condition	03	CENTRAL 100
Heating Type	04	AIR DUCTED 100
Bedrooms		4 100
Bathrooms		3.5 100
Frame	02	WOOD FRAME 100
Stories	1.5	1.5 100
Units		0 100
Quality	05	Quality Level 05

DOR CODE 0100 SINGLE FAMILY
MAP NUM | MKT AREA 01
NEIGHBORHOOD/LOC 1031.00

AREA TYPE	TOTAL GROSS AREA	PCT OF BASE	YEAR	TOT ADJ AREA	SUBAREA MARKET VALUE
APT	444	100	2000	444	83,180
FEP	56	80	2000	45	8,430
HXB	717	100	2000	717	134,325
HXB	1,243	100	2000	1,243	232,867
HXG	420	55	2000	231	43,277
HXP	84	30	2000	25	4,683
HXP	144	30	2000	43	8,056
HXU	56	55	2000	31	5,808
TOTALS	3,164			2,779	520,626

MARKET ADJUSTMENTS

TYPE	MDL	EFF. AREA	TOT ADJ PTS	EFF. BASE RATE	REPL. COST NEW	AYB	EYB	ECON	FNCT		NORM	% COND
0320	12	2,779	212.8867	212.89	591,621	2000	2000	0	0	0	12.00	88.00

1 TOWNHOUSE – 82.4% - 2020 Heated Area: 2404 HX Base Yr 2020

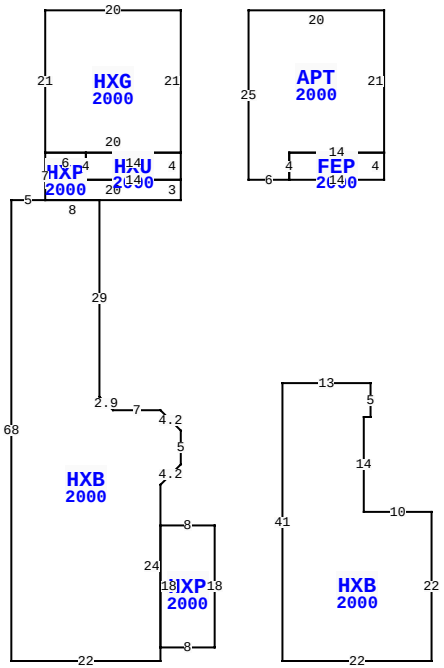

1886 CARNATION ST, FERNANDINA BEACH

BLD DATE		LGL DATE	
XF DATE		LAND DATE	05/08/2025 MLU
INC DATE		AG DATE	

NASSAU COUNTY PROPERTY

PAGE 1 of 1 2

VALUATION SUMMARY

VALUATION BY		STANDARD
Tax Group: 2	Tax Dist:	
BUILDING MARKET VALUE		520,626
TOTAL MARKET OB/XF VALUE		6,809
TOTAL LAND VALUE - MARKET		190,000
TOTAL MARKET VALUE		717,435
SOH/AGL Deduction		250,861
ASSESSED VALUE		466,574
TOTAL EXEMPTION VALUE	HX HB	50,722
BASE TAXABLE VALUE		415,852
TOTAL JUST VALUE		717,435
NCON VALUE		0
INCOME VALUE		
PREVIOUS YEAR MKT VALUE		687,341

PERMIT NUM	DESCRIPTION	AMT	ISSUED
20091168	H/AC	4,500	08/31/2009
990960	NEW CONSTR	152,138	08/02/1999
990961	NEW CONSTR	28,709	08/02/1999

SALES DATA

OFF RECORD Number	DATE	TYPE INST	Q U	V I	RSN CD	SALE PRICE
2741/1921	6/28/2024	WD	U	I	11	100
GRANTOR: CASTOR DRU ELLEN						
GRANTEE: CASTOR DRU ELLEN						
2329/0212	12/30/2019	QC	U	I	11	100
GRANTOR: HAGEMANN GLEN ANN						
GRANTEE: CASTOR DRU ELLEN						

BUILDING NOTES

EXTRA FEATURES

LN	OB/XF CODE	DESCRIPTION	BLD	CAP	L	W	UNITS	UT	Adj R	ADJ UNIT PRICE	ORIG COND	YEAR ON	YEAR ACTUAL	Q	% COND	OB/XF MKT VALUE	NOTES
1	0500	FP-PRE FAB	0	100	0	0	1.00	UT	3,500.00	3,500.00	100	2000	2000	3	83	2,905	
2	0810	CONCRETE A	0	100	7	8	56.00	SF	6.50	6.50	100	2000	2000	3	77	280	
3	0810	CONCRETE A	0	100	22	5	110.00	SF	6.50	6.50	100	2000	2000	3	77	551	
4	0810	CONCRETE A	0	100	15	16	240.00	SF	6.50	6.50	100	2000	2000	3	77	1,201	
5	0470	VNYL GATE	0	100	0	0	1.00	UT	300.00	300.00	100	2000	2000	3	48	144	
6	0476	VF 6 SBPL	0	100	0	0	62.00	LF	32.00	32.00	100	2000	2000	3	48	952	
7	0810	CONCRETE A	0	100	31	5	155.00	SF	6.50	6.50	100	2000	2000	3	77	776	

BUILDING DIMENSIONS

HXG=[YR=2000] W20 S21 HXP=[YR=2000] S7 HXB=[YR=2000] W5 S68 E22 N2 HXP=[YR=2000] E8 N18 W8 S18 $ N24 R3 U3 N5 U3 L3 W7 U2 L2 N29 W8 $ E20 N3 HXU=[YR=2000] N4 W14 S4 E14 $ W14 N4 W6 $ E20 N21 $ PTR= E15S55 HXB=[YR=2000] E13 S5 W1 S14 E10 S22 W22 N41 $ W15N55 $ PTR= E30S25 FEP=[YR=2000] N4 APT=[YR=2000] N21 W20 S25 E6 N4 E14 $ W14 S4E14$ N25W30 $.

LAND DESCRIPTION

TOTAL OB/XF 6,809

LN	USE CODE	CLS	LAND USE DESCRIPTION	CAP	RD	LOC ZONE	FRONT	DEPTH	TOT LND UTS	UNIT TYPE	DT	DPTH FACT	% COND	TOT ADJ	UNIT PRICE	ADJ UNIT PRICE	LAND VALUE	OTHER ADJUSTMENTS AND NOTES	YEAR	DENSITY	DECL	FRZ	YR	CONSRV
1	000100	C	RES	100		R-2	0.00	0.00	38.00	FF		1.00	1.00	1.00	5,000.00	5,000.00	190,000							

REVIEW DATE 05/12/2019 BY KBA Total Acres: 0.00 Total Land Value: 190,000 Market: 0 Agricultural: 0 Common: 190,000 PRINTED 07/30/2025 BY SYS