BLOCK 6 LOT 5
IN OR 2126/1103
AMELIA PARK PHASE 1 UNIT 1

KELLY KATHRYN E
PO BOX 17199
FERNANDINA BEACH, FL 32035

2025

00-00-31-102P-0006-0050

BUILDING CHARACTERISTICS

ELEMENT	CD	CONSTRUCTION
Exterior Wall	10	ABOVE AVG 100
Roof Structur	08	IRREGULAR 100
Roof Cover	03	COMP SHNGL 100
Interior Wall	05	DRYWALL 100
Interior Floo	12	HARDWOOD 70
Interior Floo	15	HARDTILE 30
Air Condition	03	CENTRAL 100
Heating Type	04	AIR DUCTED 100
Bedrooms		3 100
Bathrooms		2.5 100
Frame	02	WOOD FRAME 100
Stories	1.	1. 100
Units		0 100
Occupancy	00	NONE 100
Quality	03	Quality Level 03
DOR CODE	0100	SINGLE FAMILY
MAP NUM		MKT AREA 01
NEIGHBORHOOD/LOC	1031.00	

AREA TYPE	TOTAL GROSS AREA	PCT OF BASE	YEAR	TOT ADJ AREA	SUBAREA MARKET VALUE
BAS	2,314	100	2001	2,314	489,296
FGR	401	55	2001	221	46,730
FOP	90	30	2001	27	5,709
FOP	121	30	2001	36	7,612
FOP	174	30	2001	52	10,996
PTO	56	5	2001	3	634
TOTALS	3,156			2,653	560,978

MARKET ADJUSTMENTS

TYPE	MDL	EFF. AREA	TOT ADJ PTS	EFF. BASE RATE	REPL. COST NEW	AYB	EYB	ECON	FNCT		NORM	% COND
0500	11	2,653	143.1341	226.15	599,976	2001	2010	0	0	0	6.50	93.50

1 SFR CUST – 100% - 2018 Heated Area: 2314 HX Base Yr 2018

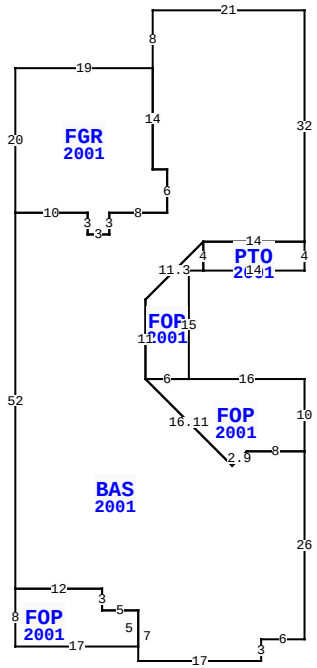

1881 GARDENIA ST, FERNANDINA BEACH

BLD DATE		LGL DATE	
XF DATE		LAND DATE	05/08/2025 MLU
INC DATE		AG DATE	

NASSAU COUNTY PROPERTY

PAGE 1 of 1 2

VALUATION SUMMARY

VALUATION BY		STANDARD
Tax Group: 2	Tax Dist:	
BUILDING MARKET VALUE		560,978
TOTAL MARKET OB/XF VALUE		7,221
TOTAL LAND VALUE - MARKET		250,000
TOTAL MARKET VALUE		818,199
SOH/AGL Deduction		342,293
ASSESSED VALUE		475,906
TOTAL EXEMPTION VALUE	HX HB	50,722
BASE TAXABLE VALUE		425,184
TOTAL JUST VALUE		818,199
NCON VALUE		0
INCOME VALUE		
PREVIOUS YEAR MKT VALUE		742,719

PERMIT NUM	DESCRIPTION	AMT	ISSUED
20181259	INTREM	450,000	04/17/2018
20100260	H/AC	3,500	02/08/2010
2003650	NEW CONSTR	149,000	08/08/2000

SALES DATA

OFF RECORD Number	DATE	TYPE INST	Q U	V I	RSN CD	SALE PRICE
2126/1103	6/14/2017	WD	Q	I	01	513,000
GRANTOR: JACKSON JAMES RONALD						
GRANTEE: KELLY KATHRYN E						
1999/1115	8/21/2015	WD	Q	I	02	408,900
GRANTOR: MAGNUSON JOANN E TRUS						
GRANTEE: JACKSON JAMES RONAL						

BUILDING NOTES

BUILDING DIMENSIONS

BAS=[YR=2001] W21 S8 FGR=[YR=2001] W19 S20 E10 S3 E3 N3 E8 N6 W2 N14 $ S14 E2 S6 W8 S3 W3 N3 W10 S52 FOP=[YR=2001] S8 E17 N5 W5 N3 W12 $ E12 S3 E5 S7 E17 N3 E6 N26 FOP=[YR=2001] N10 W16 FOP=[YR=2001] N15 E2 PTO=[YR=2001] E14N4W14S4$ N4 L8 D8 S11E6$W6 D12 R12 U2 R2 E8$ W8 D2 L2 L12 U12 N11 U8 R8 E14 N32$.

EXTRA FEATURES

LN	OB/XF CODE	DESCRIPTION	BLD	CAP	L	W	UNITS	UT	Adj R	ADJ UNIT PRICE	ORIG COND	YEAR ON	YEAR ACTUAL	Q	% COND	OB/XF MKT VALUE	NOTES
1	0500	FP-PRE FAB	0	100	0	0	1.00	UT	3,500.00	3,500.00	100	2001	2001	3	84	2,940	
2	0877	JACUZZI	0	100	0	0	1.00	UT	1,000.00	1,000.00	100	2001	2001	3	20	200	
3	0810	CONCRETE A	0	100	23	18	414.00	SF	6.50	6.50	100	2001	2001	3	79	2,126	
4	0810	CONCRETE A	0	100	13	3	39.00	SF	6.50	6.50	100	2001	2001	3	79	200	
5	0810	CONCRETE A	0	100	32	3	96.00	SF	6.50	6.50	100	2001	2001	3	79	493	
6	0819	CONC 12"	0	100	5	4	20.00	SF	9.50	9.50	100	2001	2001	3	79	150	
7	0819	CONC 12"	0	100	6	4	24.00	SF	9.50	9.50	100	2001	2001	3	79	180	
8	0910	SCRN RM L	0	100	18	16	288.00	SF	15.00	15.00	100	2001	2001	3	20	864	
9	0819	CONC 12"	0	100	3	3	9.00	SF	9.50	9.50	100	2001	2001	3	79	68	

LAND DESCRIPTION

TOTAL OB/XF 7,221

LN	USE CODE	CLS	LAND USE DESCRIPTION	CAP	RD	LOC ZONE	FRONT	DEPTH	TOT LND UTS	UNIT TYPE	DT	DPTH FACT	% COND	TOT ADJ	UNIT PRICE	ADJ UNIT PRICE	LAND VALUE	OTHER ADJUSTMENTS AND NOTES	YEAR	DENSITY	DECL	FRZ	YR	CONSRV
1	000100	C	RES	100		R-2	0.00	0.00	50.00	FF		1.00	1.00	1.00	5,000.00	5,000.00	250,000							

REVIEW DATE 05/12/2019 BY KBA Total Acres: 0.00 Total Land Value: 250,000 Market: 0 Agricultural: 0 Common: 250,000 PRINTED 07/30/2025 BY SYS