BLOCK 5 LOT 2A
AMELIA PARK PHASE 1 UNIT 1
PB 6/114-115

CASHEN MARK F & JENNY M
1621 PARK AVE
FERNANDINA BEACH, FL 32034

2025

00-00-31-102P-0005-02A0

BUILDING CHARACTERISTICS

ELEMENT	CD	CONSTRUCTION
Exterior Wall	16	WD FR STUC 100
Roof Structur	03	GABLE/HIP 100
Roof Cover	03	COMP SHNGL 100
Interior Wall	05	DRYWALL 100
Interior Floo	14	CARPET 70
Interior Floo	11	CLAY TILE 30
Air Condition	03	CENTRAL 100
Heating Type	04	AIR DUCTED 100
Bedrooms		3 100
Bathrooms		2.5 100
Frame	02	WOOD FRAME 100
Stories	1.5	1.5 100
Units		0 100
Quality	05	Quality Level 05
DOR CODE	0100	SINGLE FAMILY
MAP NUM		MKT AREA 01
NEIGHBORHOOD/LOC	1031.00	

AREA TYPE	TOTAL GROSS AREA	PCT OF BASE	YEAR	TOT ADJ AREA	SUBAREA MARKET VALUE
BAS	1,235	100	1999	1,235	232,799
FDG	462	60	1999	277	52,215
FOP	30	30	1999	9	1,697
FOP	154	30	1999	46	8,671
FUS	717	100	1999	717	135,155
TOTALS	2,598			2,284	430,537

MARKET ADJUSTMENTS

TYPE	MDL	EFF. AREA	TOT ADJ PTS	EFF. BASE RATE	REPL. COST NEW	AYB	EYB	ECON	FNCT		NORM	% COND
0320	12	2,284	215.4305	215.43	492,042	1999	1999	0	0	0	12.50	87.50

1 TOWNHOUSE - 100% - 2020 Heated Area: 1952 HX Base Yr 2020

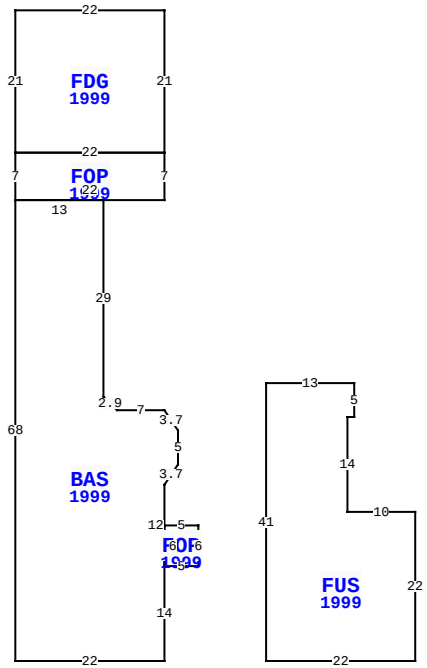

1621 PARK AVE, FERNANDINA BEACH

BLD DATE		LGL DATE	
XF DATE		LAND DATE	05/08/2025 MLU
INC DATE		AG DATE	

NASSAU COUNTY PROPERTY

PAGE 1 of 1 2

VALUATION SUMMARY

VALUATION BY		STANDARD
Tax Group: 2	Tax Dist:	
BUILDING MARKET VALUE		430,537
TOTAL MARKET OB/XF VALUE		9,963
TOTAL LAND VALUE - MARKET		110,000
TOTAL MARKET VALUE		550,500
SOH/AGL Deduction		249,913
ASSESSED VALUE		300,587
TOTAL EXEMPTION VALUE	HX HB	50,722
BASE TAXABLE VALUE		249,865
TOTAL JUST VALUE		550,500
NCON VALUE		0
INCOME VALUE		
PREVIOUS YEAR MKT VALUE		535,119

PERMIT NUM	DESCRIPTION	AMT	ISSUED
990291	NEW CONSTR	0	04/27/1999

SALES DATA

OFF RECORD Number	DATE	TYPE INST	Q U	V I	RSN CD	SALE PRICE
2264/1855	3/19/2019	WD	Q	I	01	415,000
GRANTOR: DALES WARD S P/R						
GRANTEE: CASHEN MARK F & JEN						
1939/1319	9/25/2014	WD	Q	I	02	305,000
GRANTOR: NILSEN JOYCE E REVOCA						
GRANTEE: DALES DOUGLAS S JR						

BUILDING NOTES

BUILDING DIMENSIONS

FDG=[YR=1999] W22 S21 FOP=[YR=1999] S7 BAS=[YR=1999] S68 E22 N14 FOP=[YR=1999] E5 N6 W5 S6 $ N12 R2 U3 N5 U3 L2 W7 U2 L2 N29 W13 $ E22 N7W22 $ E22 N21 $ PTR= E15S55 FUS=[YR=1999] E13 S5 W1 S14 E10 S22W22 N41 $ N55W15 $.

EXTRA FEATURES

LN	OB/XF CODE	DESCRIPTION	BLD	CAP	L	W	UNITS	UT	Adj R	ADJ UNIT PRICE	ORIG COND	YEAR ON	YEAR ACTUAL	Q	% COND	OB/XF MKT VALUE	NOTES
1	0500	FP-PRE FAB	0	100	0	0	1.00	UT	3,500.00	3,500.00	100	1999	1999	3	81	2,835	
2	0819	CONC 12"	0	100	31	5	155.00	SF	9.50	9.50	100	1999	1999	3	75	1,104	
3	0810	CONCRETE A	0	100	0	0	136.00	SF	6.50	6.50	100	1999	1999	3	75	663	
4	0810	CONCRETE A	0	100	14	16	224.00	SF	6.50	6.50	100	2000	2000	3	77	1,121	
5	0825	BRICK	0	100	0	0	265.00	SF	12.50	12.50	100	2000	2000	3	93	3,081	
6	0810	CONCRETE A	0	100	28	3	84.00	SF	6.50	6.50	100	2000	2000	3	77	420	
7	0470	VNYL GATE	0	100	0	0	1.00	UT	300.00	300.00	100	2000	2000	3	48	144	
8	0476	VF 6 SBPL	0	100	0	0	39.00	LF	16.00	16.00	100	2000	2000	3	48	300	
9	0476	VF 6 SBPL	0	100	0	0	28.00	LF	16.00	16.00	100	2001	2001	3	52	233	
10	0810	CONCRETE A	0	100	4	3	12.00	SF	6.50	6.50	100	2001	2001	3	79	62	

TOTAL OB/XF 9,963

LAND DESCRIPTION

LN	USE CODE	CLS	LAND USE DESCRIPTION	CAP	RD	LOC ZONE	FRONT	DEPTH	TOT LND UTS	UNIT TYPE	DT	DPTH FACT	% COND	TOT ADJ	UNIT PRICE	ADJ UNIT PRICE	LAND VALUE	OTHER ADJUSTMENTS AND NOTES	YEAR	DENSITY	DECL	FRZ	YR	CONSRV
1	000100	C	RES	100	0003	R-2	0.00	0.00	22.00	FF		1.00	1.00	1.00	5,000.00	5,000.00	110,000							

REVIEW DATE 05/12/2019 BY KBA Total Acres: 0.00 Total Land Value: 110,000 Market: 0 Agricultural: 0 Common: 110,000 PRINTED 07/30/2025 BY SYS