BLOCK 5 LOT 1D
AMELIA PARK PHASE 1 UNIT 1
PB 6/114-115

EBEY RONDALL D & MARGARET L
1637 PARK AVENUE
FERNANDINA BEACH, FL 32034

2025

00-00-31-102P-0005-01D0

BUILDING CHARACTERISTICS

ELEMENT	CD	CONSTRUCTION
Exterior Wall	16	WD FR STUC 100
Roof Structur	03	GABLE/HIP 100
Roof Cover	03	COMP SHNGL 100
Interior Wall	05	DRYWALL 100
Interior Floo	14	CARPET 90
Interior Floo	11	CLAY TILE 10
Air Condition	03	CENTRAL 100
Heating Type	04	AIR DUCTED 100
Bedrooms		4 100
Bathrooms		3.5 100
Frame	02	WOOD FRAME 100
Stories	2.	2. 100
Units		0 100
Quality	05	Quality Level 05

DOR CODE 0100 SINGLE FAMILY
MAP NUM | MKT AREA 01
NEIGHBORHOOD/LOC 1031.00

AREA TYPE	TOTAL GROSS AREA	PCT OF BASE	YEAR	TOT ADJ AREA	SUBAREA MARKET VALUE
APT	444	100	2001	444	83,461
FOP	56	30	2001	17	3,196
HXB	606	100	2001	606	113,912
HXB	1,078	100	2001	1,078	202,636
HXG	420	55	2001	231	43,422
HXP	24	30	2001	7	1,316
TOTALS	2,628			2,383	447,942

MARKET ADJUSTMENTS

TYPE	MDL	EFF. AREA	TOT ADJ PTS	EFF. BASE RATE	REPL. COST NEW	AYB	EYB	ECON	FNCT		NORM	% COND
0320	12	2,383	212.4042	212.40	506,149	2001	2001	0	0	0	11.50	88.50

1 TOWNHOUSE - 0% - 2025 Heated Area: 2128 HX Base Yr

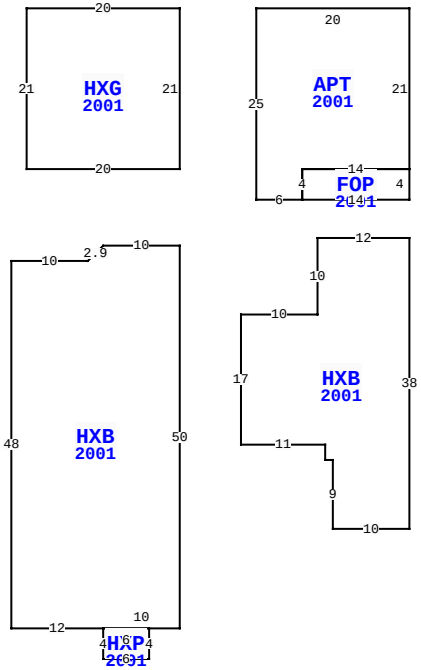

1637 PARK AV, FERNANDINA BEACH

BLD DATE		LGL DATE	
XF DATE		LAND DATE	05/08/2025 MLU
INC DATE		AG DATE	

NASSAU COUNTY PROPERTY

PAGE 1 of 1 2

VALUATION SUMMARY

VALUATION BY	STANDARD
Tax Group: 2	Tax Dist:
BUILDING MARKET VALUE	447,942
TOTAL MARKET OB/XF VALUE	3,586
TOTAL LAND VALUE - MARKET	110,000
TOTAL MARKET VALUE	561,528
SOH/AGL Deduction	0
ASSESSED VALUE	561,528
TOTAL EXEMPTION VALUE	0
BASE TAXABLE VALUE	561,528
TOTAL JUST VALUE	561,528
NCON VALUE	0
INCOME VALUE	
PREVIOUS YEAR MKT VALUE	546,219

PERMIT NUM	DESCRIPTION	AMT	ISSUED
2003398	NEW CONSTR	130,000	07/03/2000
2003399	NEW CONSTR	27,000	07/03/2000

SALES DATA

OFF RECORD Number	DATE	TYPE INST	Q U	V I	RSN CD	SALE PRICE
2741/1879	10/04/2024	WD	U	I	37	575,000
GRANTOR: 1637 PARK AVE LLC						
GRANTEE: EBEY RONDALL D & MA						
1980/0273	5/04/2015	WD	U	I	30	191,300
GRANTOR: WETZEL MATTHEW I						
GRANTEE: 1637 PARK AVE LLC						

BUILDING NOTES

BUILDING DIMENSIONS

HXG=[YR=2001] W20 S21 E20 N21$ PTR= S31 HXB=[YR=2001] W10 D2 L2 W10 S48 E12 HXP=[YR=2001] S4 E6 N4 W6 $ E10 N50 $ N31 $ PTR= E10 APT=[YR=2001] E20 S21 FOP=[YR=2001] S4 W14 N4 E14 $ W14 S4 W6 N25 $ W10 $ PTR= E30 S30 HXB=[YR=2001] S38 W10 N9 W1 N2 W11 N17 E10 N10 E12 $ N30 W30 $.

EXTRA FEATURES

LN	OB/XF CODE	DESCRIPTION	BLD	CAP	L	W	UNITS	UT	Adj R	ADJ UNIT PRICE	ORIG COND	YEAR ON	YEAR ACTUAL	Q	% COND	OB/XF MKT VALUE	NOTES
1	0819	CONC 12"	0	0	2	5	10.00	SF	9.50	9.50	100	2001	2001	3	79	75	
2	0810	CONCRETE A	0	0	8	3	24.00	SF	6.50	6.50	100	2001	2001	3	79	123	
3	0810	CONCRETE A	0	0	21	16	336.00	SF	6.50	6.50	100	2001	2001	3	79	1,725	
4	0810	CONCRETE A	0	0	0	0	232.00	SF	6.50	6.50	100	2001	2001	3	79	1,191	
5	0470	VNYL GATE	0	0	0	0	1.00	UT	300.00	300.00	100	2001	2001	3	52	156	
6	0476	VF 6 SBPL	0	0	0	0	38.00	LF	16.00	16.00	100	2001	2001	3	52	316	

LAND DESCRIPTION

TOTAL OB/XF 3,586

LN	USE CODE	CLS	LAND USE DESCRIPTION	CAP	RD	LOC ZONE	FRONT	DEPTH	TOT LND UTS	UNIT TYPE	DT	DPTH FACT	% COND	TOT ADJ	UNIT PRICE	ADJ UNIT PRICE	LAND VALUE	OTHER ADJUSTMENTS AND NOTES	YEAR	DENSITY	DECL	FRZ	YR	CONSRV
1	000100	C	RES	0		R-2	0.00	0.00	22.00	FF		1.00	1.00	1.00	5,000.00	5,000.00	110,000							

REVIEW DATE 05/12/2019 BY KBA Total Acres: 0.00 Total Land Value: 110,000 Market: 0 Agricultural: 0 Common: 110,000 PRINTED 07/30/2025 BY SYS