BLOCK 4 LOT 2
AMELIA PARK PHASE 1 UNIT 1
PB 6/114-115

THOMAS JANETT MARY REVOCABLE LIVING TRUST
1707 PARK AV
FERNANDINA BEACH, FL 32034

**2025**

**00-00-31-102P-0004-0020**

## BUILDING CHARACTERISTICS

| ELEMENT | CD | CONSTRUCTION |
|---|---|---|
| Exterior Wall | 10 | ABOVE AVG 100 |
| Roof Structur | 08 | IRREGULAR 100 |
| Roof Cover | 03 | COMP SHNGL 100 |
| Interior Wall | 05 | DRYWALL 100 |
| Interior Floo | 15 | HARDTILE 80 |
| Interior Floo | 12 | HARDWOOD 20 |
| Air Condition | 03 | CENTRAL 100 |
| Heating Type | 04 | AIR DUCTED 100 |
| Bedrooms | | 3 100 |
| Bathrooms | | 2.5 100 |
| Frame | 02 | WOOD FRAME 100 |
| Stories | 1. | 1. 100 |
| Units | | 0 100 |
| Occupancy | 00 | NONE 100 |
| Quality | 03 | Quality Level 03 |
| DOR CODE | 0100 | SINGLE FAMILY |
| MAP NUM | | MKT AREA 01 |
| NEIGHBORHOOD/LOC | 1031.00 | |

| AREA TYPE | TOTAL GROSS AREA | PCT OF BASE | YEAR | TOT ADJ AREA | SUBAREA MARKET VALUE |
|---|---|---|---|---|---|
| BAS | 2,307 | 100 | 2003 | 2,307 | 485,564 |
| FGR | 408 | 55 | 2003 | 224 | 47,147 |
| FOP | 86 | 30 | 2003 | 26 | 5,472 |
| FOP | 155 | 30 | 2003 | 46 | 9,682 |
| FOP | 174 | 30 | 2003 | 52 | 10,945 |
| PTO | 60 | 5 | 2003 | 3 | 632 |
| TOTALS | 3,190 | | | 2,658 | 559,440 |

## MARKET ADJUSTMENTS

| TYPE | MDL | EFF. AREA | TOT ADJ PTS | EFF. BASE RATE | REPL. COST NEW | AYB | EYB | ECON | FNCT | | NORM | % COND |
|---|---|---|---|---|---|---|---|---|---|---|---|---|
| 0500 | 11 | 2,658 | 148.0109 | 233.86 | 621,600 | 2003 | 2003 | 0 | 0 | 0 | 10.00 | 90.00 |

1 SFR CUST – 100% - 2016 Heated Area: 2307 HX Base Yr 2016

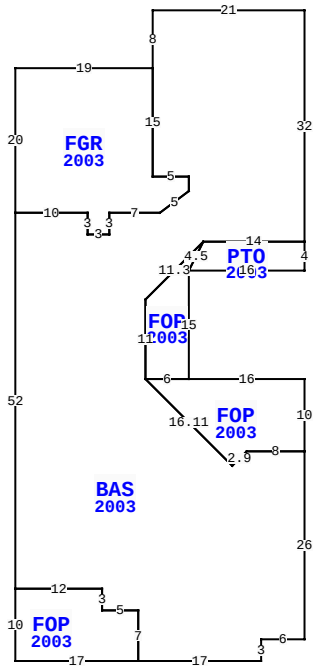


1707 PARK AVE, FERNANDINA BEACH

| | | | |
|---|---|---|---|
| BLD DATE | | LGL DATE | |
| XF DATE | | LAND DATE | 05/08/2025 MLU |
| INC DATE | | AG DATE | |

## NASSAU COUNTY PROPERTY

PAGE 1 of 1 2

### VALUATION SUMMARY

| | | |
|---|---|---|
| VALUATION BY | | STANDARD |
| Tax Group: 2 | Tax Dist: | |
| BUILDING MARKET VALUE | | 559,440 |
| TOTAL MARKET OB/XF VALUE | | 7,059 |
| TOTAL LAND VALUE - MARKET | | 325,000 |
| TOTAL MARKET VALUE | | 891,499 |
| SOH/AGL Deduction | | 500,873 |
| ASSESSED VALUE | | 390,626 |
| TOTAL EXEMPTION VALUE | HX HB WX | 55,722 |
| BASE TAXABLE VALUE | | 334,904 |
| TOTAL JUST VALUE | | 891,499 |
| NCON VALUE | | 0 |
| INCOME VALUE | | |
| PREVIOUS YEAR MKT VALUE | | 801,456 |

| PERMIT NUM | DESCRIPTION | AMT | ISSUED |
|---|---|---|---|
| 20030000 | XFOB | 3,000 | 09/03/2003 |
| 20032438 | NEW CONSTR | 180,000 | 01/30/2003 |

## SALES DATA

| OFF RECORD Number | DATE | TYPE INST | Q U | V I | RSN CD | SALE PRICE |
|---|---|---|---|---|---|---|
| 2741/416 | 10/01/2024 | QC | U | I | 11 | 100 |
| GRANTOR: THOMAS JANETT | | | | | | |
| GRANTEE: THOMAS JANETT MARY | | | | | | |
| 1965/1819 | 3/02/2015 | WD | Q | I | 01 | 487,500 |
| GRANTOR: STROBEL WILLIAM D & S | | | | | | |
| GRANTEE: THOMAS JANETT | | | | | | |

## BUILDING NOTES

## EXTRA FEATURES

| L N | OB/XF CODE | DESCRIPTION | BLD | CAP | L | W | UNITS | UT | Adj R | ADJ UNIT PRICE | ORIG COND | YEAR ON | YEAR ACTUAL | Q | % COND | OB/XF MKT VALUE | NOTES |
|---|---|---|---|---|---|---|---|---|---|---|---|---|---|---|---|---|---|
| 1 | 0855 | CONC PAVER | 0 | 100 | 0 | 0 | 114.00 | SF | 15.00 | 15.00 | 100 | 2003 | 2003 | 3 | 82 | 1,402 | |
| 2 | 0855 | CONC PAVER | 0 | 100 | 11 | 3 | 33.00 | SF | 15.00 | 15.00 | 100 | 2003 | 2003 | 3 | 82 | 406 | |
| 3 | 0810 | CONCRETE A | 0 | 100 | 21 | 4 | 84.00 | SF | 6.50 | 6.50 | 100 | 2003 | 2003 | 3 | 82 | 448 | |
| 4 | 0810 | CONCRETE A | 0 | 100 | 0 | 0 | 730.00 | SF | 6.50 | 6.50 | 100 | 2003 | 2003 | 3 | 82 | 3,891 | |
| 6 | 0910 | SCRN RM L | 0 | 100 | 16 | 19 | 304.00 | SF | 15.00 | 15.00 | 100 | 2003 | 2003 | 3 | 20 | 912 | |
| 7 | 0885 | WATERSCAPE | 0 | 100 | 0 | 0 | 1.00 | UT | 0.00 | 0.00 | 100 | 2003 | 2003 | 3 | 100 | 0 | |

## BUILDING DIMENSIONS

BAS=[YR=2003] W21 S8 FGR=[YR=2003] W19 S20 E10 S3 E3 N3 E7 U3 R4 N2W5 N15$ S15E5S2 L4 D3 W7 S3 W3 N3 W10 S52 FOP=[YR=2003] S10 E17 N7 W5 N3 W12$ E12 S3 E5 S7 E17 N3 E6 N26 FOP=[YR=2003] N10 W16 FOP=[YR=2003] N15 PTO=[YR=2003] E16N4W14 L2 D4 $ R2 U4 L8 D8 S11E6$ W6 D12 R12 U2 R2 E8$ W8 D2 L2 L12 U12 N11 U8 R8 E14N32$.

## LAND DESCRIPTION

TOTAL OB/XF 7,059

| L N | USE CODE | CLS | LAND USE DESCRIPTION | CAP | R D | LOC ZONE | FRONT | DEPTH | TOT LND UTS | UNIT TYPE | D T | DPTH FACT | % COND | TOT ADJ | UNIT PRICE | ADJ UNIT PRICE | LAND VALUE | OTHER ADJUSTMENTS AND NOTES | YEAR | DENSITY | DECL | FRZ | YR | CONSRV |
|---|---|---|---|---|---|---|---|---|---|---|---|---|---|---|---|---|---|---|---|---|---|---|---|---|
| 1 | 000100 | C | RES | 100 | | R-2 | 0.00 | 0.00 | 65.00 | FF | | 1.00 | 1.00 | 1.00 | 5,000.00 | 5,000.00 | 325,000 | | | | | | | |

REVIEW DATE 05/12/2019 BY KBA Total Acres: 0.00 Total Land Value: 325,000 Market: 0 Agricultural: 0 Common: 325,000 PRINTED 07/30/2025 BY SYS