BLOCK 2 LOT 4
AMELIA PARK PHASE 1 UNIT 1
PB 6/114-115

TURK JERRY WAYNE & JANIS RAE L/E/
1715 MCARTHUR ST
FERNANDINA BEACH, FL 32034

2025

00-00-31-102P-0002-0040

NASSAU COUNTY PROPERTY

BUILDING CHARACTERISTICS

ELEMENT	CD	CONSTRUCTION
Exterior Wall	10	ABOVE AVG 100
Roof Structur	08	IRREGULAR 100
Roof Cover	03	COMP SHNGL 100
Interior Wall	05	DRYWALL 100
Interior Floo	14	CARPET 90
Interior Floo	15	HARDTILE 10
Air Condition	03	CENTRAL 100
Heating Type	04	AIR DUCTED 100
Bedrooms		3 100
Bathrooms		2.5 100
Frame	02	WOOD FRAME 100
Stories	1.	1. 100
Units		0 100
Occupancy	00	NONE 100
Quality	03	Quality Level 03

DOR CODE 0100 SINGLE FAMILY
MAP NUM | MKT AREA 01
NEIGHBORHOOD/LOC 1031.00

AREA TYPE	TOTAL GROSS AREA	PCT OF BASE	YEAR	TOT ADJ AREA	SUBAREA MARKET VALUE
BAS	2,311	100	2002	2,311	443,453
FGR	557	55	2002	306	58,717
FOP	121	30	2002	36	6,908
FSP	90	40	2014	36	6,908
FSP	174	40	2014	70	13,432
PTO	56	5	2002	3	575
TOTALS	3,309			2,762	529,995

MARKET ADJUSTMENTS

TYPE	MDL	EFF. AREA	TOT ADJ PTS	EFF. BASE RATE	REPL. COST NEW	AYB	EYB	ECON	FNCT		NORM	% COND
0500	11	2,762	135.6970	214.40	592,173	2002	2002	0	0	0	10.50	89.50

1 SFR CUST – 100% - 2004 Heated Area: 2311 HX Base Yr 2004

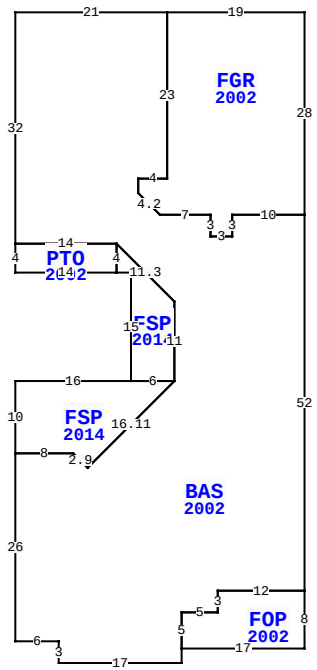

1715 MCARTHUR ST, FERNANDINA BEACH

BLD DATE		LGL DATE	
XF DATE		LAND DATE	05/08/2025 MLU
INC DATE		AG DATE	

VALUATION SUMMARY

VALUATION BY		STANDARD
Tax Group: 2	Tax Dist:	
BUILDING MARKET VALUE		529,995
TOTAL MARKET OB/XF VALUE		10,461
TOTAL LAND VALUE - MARKET		250,000
TOTAL MARKET VALUE		790,456
SOH/AGL Deduction		441,457
ASSESSED VALUE		348,999
TOTAL EXEMPTION VALUE	HX HB VX	55,722
BASE TAXABLE VALUE		293,277
TOTAL JUST VALUE		790,456
NCON VALUE		0
INCOME VALUE		
PREVIOUS YEAR MKT VALUE		716,666

PERMIT NUM	DESCRIPTION	AMT	ISSUED
011669	NEW CONSTR	1,878,460	07/20/2001

SALES DATA

OFF RECORD Number	DATE	TYPE INST	Q / U	V / I	RSN CD	SALE PRICE
2717/1827	6/07/2024	LE	U	I	11	100
GRANTOR: TURK JERRY WAYNE & JA						
GRANTEE: GARDNER DEWEY EDWAR						
0992/0977	6/18/2001	WD	Q	V		41,900
GRANTOR: BRYLEN HOMES LTD						
GRANTEE: TURK JERRY WAYNE &						

BUILDING NOTES

BUILDING DIMENSIONS

FGR=[YR=2002] W19 BAS=[YR=2002] W21 S32 PTO=[YR=2002] S4 E14 FSP=[YR=2014] E2S15 FSP=[YR=2014] W16S10E8 D2 R2 R12 U12 W6$E6 N11 U8 L8 S4$N4 W14 $E14 R8 D8 S11 D12 L12 U2 L2 W8 S26 E6 S3 E17 N2 FOP=[YR=2002] E17 N8 W12 S3 W5 S5 $ N5 E5 N3 E12 N52 W10 S3 W3 N3 W7 U3 L3 N2E4 N23$S23W4S2 D3 R3 E7S3 E3 N3 E10 N28 $.

EXTRA FEATURES

LN	OB/XF CODE	DESCRIPTION	BLD	CAP	L	W	UNITS	UT	Adj R	ADJ UNIT PRICE	ORIG COND	YEAR ON	YEAR ACTUAL	Q	% COND	OB/XF MKT VALUE	NOTES
1	0819	CONC 12"	0	100	6	5	30.00	SF	9.50	9.50	100	2002	2002	3	80	228	
2	0810	CONCRETE A	0	100	11	3	33.00	SF	6.50	6.50	100	2002	2002	3	80	172	
3	0810	CONCRETE A	0	100	6	3	18.00	SF	6.50	6.50	100	2002	2002	3	80	94	
4	0810	CONCRETE A	0	100	43	16	688.00	SF	6.50	6.50	100	2002	2002	3	80	3,578	
5	0910	SCRN RM L	0	100	16	18	288.00	SF	15.00	15.00	100	2002	2002	3	20	864	
6	0855	CONC PAVER	0	100	40	3	120.00	SF	10.00	10.00	100	2003	2003	3	82	984	
7	0855	CONC PAVER	0	100	0	0	380.00	SF	10.00	10.00	100	2003	2003	3	82	3,116	
8	0476	VF 6 SBPL	0	100	0	0	73.00	LF	32.00	32.00	100	2004	2004	3	61	1,425	

LAND DESCRIPTION

TOTAL OB/XF 10,461

LN	USE CODE	CLS	LAND USE DESCRIPTION	CAP	RD	LOC ZONE	FRONT	DEPTH	TOT LND UTS	UNIT TYPE	DT	DPTH FACT	% COND	TOT ADJ	UNIT PRICE	ADJ UNIT PRICE	LAND VALUE	OTHER ADJUSTMENTS AND NOTES	YEAR	DENSITY	DECL	FRZ	YR	CONSRV
1	000100	C	RES	100	0003	R-2	0.00	0.00	50.00	FF		1.00	1.00	1.00	5,000.00	5,000.00	250,000							

REVIEW DATE 05/12/2019 BY KBA Total Acres: 0.00 Total Land Value: 250,000 Market: 0 Agricultural: 0 Common: 250,000 PRINTED 07/30/2025 BY SYS