LOT 13
COTTAGE AT AMELIA OR 2387/1775

DAV FLORIDA SERVICES LLC
PO BOX 767522
ROSWELL, GA 30076

2025

00-00-31-1025-0013-0000

BUILDING CHARACTERISTICS

ELEMENT	CD	CONSTRUCTION
Exterior Wall	10	ABOVE AVG 100
Roof Structur	03	GABLE/HIP 100
Roof Cover	03	COMP SHNGL 100
Interior Wall	05	DRYWALL 100
Interior Floo	13	LVT/LAMNT 60
Interior Floo	14	CARPET 40
Air Condition	03	CENTRAL 100
Heating Type	04	AIR DUCTED 100
Bedrooms		2 100
Bathrooms		2.5 100
Frame	02	WOOD FRAME 100
Stories	2.	2. 100
Units		0 100
Quality	04	Quality Level 04
DOR CODE	0100	SINGLE FAMILY
MAP NUM		MKT AREA 01
NEIGHBORHOOD/LOC	1009.00	

AREA TYPE	TOTAL GROSS AREA	PCT OF BASE	YEAR	TOT ADJ AREA	SUBAREA MARKET VALUE
BAS	406	100	2024	406	86,072
FGR	330	55	2024	182	38,584
FOP	108	30	2024	32	6,784
FOP	108	30	2024	32	6,784
FOP	128	30	2024	38	8,056
FUS	824	100	2024	824	174,688
STP	9	10	2024	1	212
STR	40	10	2024	4	848
TOTALS	1,953			1,519	322,028

MARKET ADJUSTMENTS

TYPE	MDL	EFF. AREA	TOT ADJ PTS	EFF. BASE RATE	REPL. COST NEW	AYB	EYB	ECON	FNCT		NORM	% COND
0320	12	1,519	212.0009	212.00	322,028	2023	2023	0	0	0	0.00	100.00

1 TOWNHOUSE – 0% - 2024 Heated Area: 1230 HX Base Yr

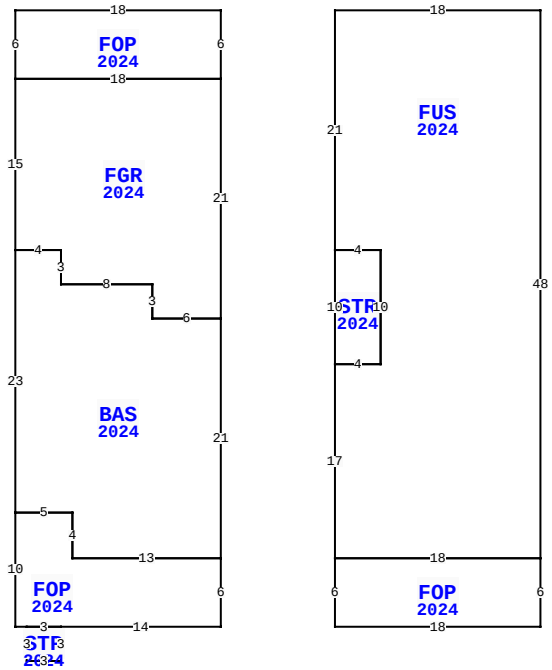

424 S 8TH ST, FERNANDINA BEACH

BLD DATE		LGL DATE	
XF DATE		LAND DATE	04/15/2025 DC
INC DATE		AG DATE	

NASSAU COUNTY PROPERTY

PAGE 1 of 1 2

VALUATION SUMMARY

VALUATION BY	STANDARD
Tax Group: 2	Tax Dist:
BUILDING MARKET VALUE	322,028
TOTAL MARKET OB/XF VALUE	4,022
TOTAL LAND VALUE - MARKET	65,000
TOTAL MARKET VALUE	391,050
SOH/AGL Deduction	777
ASSESSED VALUE	390,273
TOTAL EXEMPTION VALUE	0
BASE TAXABLE VALUE	390,273
TOTAL JUST VALUE	391,050
NCON VALUE	0
INCOME VALUE	
PREVIOUS YEAR MKT VALUE	354,794

PERMIT NUM	DESCRIPTION	AMT	ISSUED
20211433	CO		03/02/2023
20211433	NEW CONSTR	185,890	08/17/2021

SALES DATA

OFF RECORD Number	DATE	TYPE INST	Q / U	V / I	RSN CD	SALE PRICE
2627/0456	3/17/2023	WD	Q	I	01	395,300
GRANTOR: NEW ATLANTIC BUILDERS						
GRANTEE: DAV FLORIDA SERVICE						
2392/1263	9/02/2020	WD	Q	V	05	616,000
GRANTOR: SIMMONS 9 LLC						
GRANTEE: NEW ATLANTIC BUILDE						

BUILDING NOTES

EXTRA FEATURES

LN	OB/XF CODE	DESCRIPTION	BLD	CAP	L	W	UNITS	UT	Adj R	ADJ UNIT PRICE	ORIG COND	YEAR ON	YEAR ACTUAL	Q	% COND	OB/XF MKT VALUE	NOTES
1	0855	CONC PAVER	0	0	0	0	298.00	SF	10.00	10.00	100	2024	2023		100	2,980	
2	0462	ST/AL FNC	0	0	19	4	76.00	SF	10.00	10.00	100	2024	2023		98	745	
3	0463	FENCE GATE	0	0	0	0	1.00	UT	300.00	300.00	100	2024	2023		99	297	

BUILDING DIMENSIONS

FOP=[YR=2024;ORIG=10,10] E18 S6 W18 N6 $
FGR=[YR=2024;ORIG=10,16] E18 S21 W6 N3 W8 N3 W4 N15 $
BAS=[YR=2024;ORIG=10,31] E4 S3 E8 S3 E6 S21 W13 N4 W5 N23 $
FOP=[YR=2024;ORIG=10,54] E5 S4 E13 S6 W14 W3 W1 N10 $
STP=[YR=2024;ORIG=11,64] E3 S3 W3 N3 $
FUS=[YR=2024;ORIG=38,10] E18 S48 W18 N17 E4 N10 W4 N21 $
STR=[YR=2024;ORIG=38,31] E4 S10 W4 N10 $
FOP=[YR=2024;ORIG=38,58] E18 S6 W18 N6 $
.

LAND DESCRIPTION

TOTAL OB/XF 4,022

LN	USE CODE	CLS	LAND USE DESCRIPTION	CAP	RD	LOC ZONE	FRONT	DEPTH	TOT LND UTS	UNIT TYPE	DT	DPTH FACT	% COND	TOT ADJ	UNIT PRICE	ADJ UNIT PRICE	LAND VALUE	OTHER ADJUSTMENTS AND NOTES	YEAR	DENSITY	DECL	FRZ	YR	CONSRV
1	000310	C	TOWNHOUSE	0		MU-8	0.00	0.00	1.00	LT		1.00	1.00	1.00	65,000.00	65,000.00	65,000							

REVIEW DATE 12/15/2022 BY TW Total Acres: 0.00 Total Land Value: 65,000 Market: 0 Agricultural: 0 Common: 65,000 PRINTED 07/30/2025 BY SYS