LOT 11
COTTAGE AT AMELIA OR 2387/1775

HEBERT ISABEL C REVOCABLE TRUST/HEBERT ISABEL C TR
420 S 8TH ST
FERNANDINA BEACH, FL 32034

2025

00-00-31-1025-0011-0000

NASSAU COUNTY PROPERTY

BUILDING CHARACTERISTICS

ELEMENT	CD	CONSTRUCTION
Exterior Wall	10	ABOVE AVG 100
Roof Structur	03	GABLE/HIP 100
Roof Cover	03	COMP SHNGL 100
Interior Wall	05	DRYWALL 100
Interior Floo	13	LVT/LAMNT 60
Interior Floo	14	CARPET 40
Air Condition	03	CENTRAL 100
Heating Type	04	AIR DUCTED 100
Bedrooms		2 100
Bathrooms		2.5 100
Frame	02	WOOD FRAME 100
Stories	2.	2. 100
Units		0 100
Quality	04	Quality Level 04
DOR CODE	0100	SINGLE FAMILY
MAP NUM		MKT AREA 01
NEIGHBORHOOD/LOC	1009.00	

AREA TYPE	TOTAL GROSS AREA	PCT OF BASE	YEAR	TOT ADJ AREA	SUBAREA MARKET VALUE
BAS	330	100	2024	330	67,386
BAS	406	100	2024	406	82,905
FOP	108	30	2024	32	6,534
FOP	108	30	2024	32	6,534
FOP	128	30	2024	38	7,760
FUS	824	100	2024	824	168,261
STP	9	10	2024	1	204
STR	40	10	2024	4	817
TOTALS	1,953			1,667	340,401

MARKET ADJUSTMENTS

TYPE	MDL	EFF. AREA	TOT ADJ PTS	EFF. BASE RATE	REPL. COST NEW	AYB	EYB	ECON	FNCT		NORM	% COND
0320	12	1,667	204.2040	204.20	340,401	2023	2023	0	0	0	0.00	100.00

1 TOWNHOUSE – 100% - 2024 Heated Area: 1560 HX Base Yr 2024

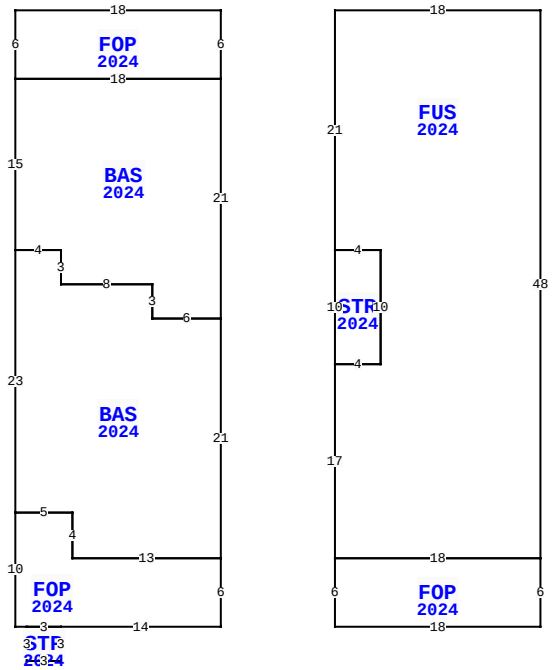

420 S 8TH ST, FERNANDINA BEACH

BLD DATE		LGL DATE	
XF DATE		LAND DATE	04/15/2025 DC
INC DATE		AG DATE	

NASSAU COUNTY PROPERTY — VALUATION SUMMARY

VALUATION BY		STANDARD
Tax Group: 2	Tax Dist:	
BUILDING MARKET VALUE		340,401
TOTAL MARKET OB/XF VALUE		4,442
TOTAL LAND VALUE - MARKET		65,000
TOTAL MARKET VALUE		409,843
SOH/AGL Deduction		27,549
ASSESSED VALUE		382,294
TOTAL EXEMPTION VALUE	HX HB	50,722
BASE TAXABLE VALUE		331,572
TOTAL JUST VALUE		409,843
NCON VALUE		0
INCOME VALUE		
PREVIOUS YEAR MKT VALUE		371,520

PERMIT NUM	DESCRIPTION	AMT	ISSUED
2022-2190	CO		09/08/2023
20222190	NEW CONSTR	0	06/17/2022

SALES DATA

OFF RECORD Number	DATE	TYPE INST	Q / U	V / I	RSN CD	SALE PRICE
2669/1709	9/15/2023	WD	Q	I	01	409,300
GRANTOR: NEW ATLANTIC BUILDERS						
GRANTEE: HEBERT ISABEL C REV						
2469/1615	6/02/2021	WD	Q	V	05	810,000
GRANTOR: SIMMONS 9 LLC						
GRANTEE: NEW ATLANTIC BUILDE						

BUILDING NOTES

BUILDING DIMENSIONS

FUS=[YR=2024;ORIG=38,10] E18 S48 W18 N17 E4 N10 W4 N21 $
BAS=[YR=2024;ORIG=10,31] E4 S3 E8 S3 E6 S21 W13 N4 W5 N23 $
BAS=[YR=2024;ORIG=10,16] E18 S21 W6 N3 W8 N3 W4 N15 $
FOP=[YR=2024;ORIG=10,54] E5 S4 E13 S6 W14 W3 W1 N10 $
FOP=[YR=2024;ORIG=10,10] E18 S6 W18 N6 $
FOP=[YR=2024;ORIG=38,58] E18 S6 W18 N6 $
STR=[YR=2024;ORIG=38,31] E4 S10 W4 N10 $
STP=[YR=2024;ORIG=11,64] E3 S3 W3 N3 $
.

EXTRA FEATURES

LN	OB/XF CODE	DESCRIPTION	BLD	CAP	L	W	UNITS	UT	Adj R	ADJ UNIT PRICE	ORIG COND	YEAR ON	YEAR ACTUAL	Q	% COND	OB/XF MKT VALUE	NOTES
1	0855	CONC PAVER	0	100	0	0	340.00	SF	10.00	10.00	100	2024	2023		100	3,400	
2	0462	ST/AL FNC	0	100	19	4	76.00	SF	10.00	10.00	100	2024	2023		98	745	
3	0463	FENCE GATE	0	100	0	0	1.00	UT	300.00	300.00	100	2024	2023		99	297	

LAND DESCRIPTION

TOTAL OB/XF 4,442

LN	USE CODE	CLS	LAND USE DESCRIPTION	CAP	RD	LOC ZONE	FRONT	DEPTH	TOT LND UTS	UNIT TYPE	DT	DPTH FACT	% COND	TOT ADJ	UNIT PRICE	ADJ UNIT PRICE	LAND VALUE	OTHER ADJUSTMENTS AND NOTES	YEAR	DENSITY	DECL	FRZ	YR	CONSRV
1	000310	C	TOWNHOUSE	100		MU-8	0.00	0.00	1.00	LT		1.00	1.00	1.00	65,000.00	65,000.00	65,000							

REVIEW DATE 12/15/2022 BY TW Total Acres: 0.00 Total Land Value: 65,000 Market: 0 Agricultural: 0 Common: 65,000 PRINTED 07/30/2025 BY SYS