LOT W 100 FT OF 2
ALTA VISTA 2 PB 2/44

SOLIER GEORGE A JR & SUZANNE T
2117 ATLANTIC AVE
FERNANDINA BEACH, FL 32034

2025

00-00-31-100B-0002-0000

BUILDING CHARACTERISTICS

ELEMENT	CD	CONSTRUCTION
Exterior Wall	15	CONC BLOCK 100
Roof Structur	03	GABLE/HIP 100
Roof Cover	03	COMP SHNGL 100
Interior Wall	05	DRYWALL 100
Interior Floo	13	LVT/LAMNT 90
Interior Floo	11	CLAY TILE 10
Air Condition	03	CENTRAL 100
Heating Type	04	AIR DUCTED 100
Bedrooms		4 100
Bathrooms		2.5 100
Frame	03	MASONRY 100
Stories	1.	1. 100
Units		0 100
BUD8 Adjustme	02	DIST FB 100
Occupancy	00	NONE 100
Quality	03	Quality Level 03
DOR CODE	0100	SINGLE FAMILY
MAP NUM		MKT AREA 01
NEIGHBORHOOD/LOC	1012.00	

AREA TYPE	TOTAL GROSS AREA	PCT OF BASE	YEAR	TOT ADJ AREA	SUBAREA MARKET VALUE
BAS	1,341	100	1993	1,341	119,849
BAS	120	100	2021	120	10,725
BAS	220	100	2021	220	19,662
BAS	1,002	100	2021	1,002	89,552
FOP	95	30	2021	28	2,503
FOP	96	30	2021	29	2,592
STP	33	10	2021	3	268
TOTALS	2,907			2,743	245,150

MARKET ADJUSTMENTS

TYPE	MDL	EFF. AREA	TOT ADJ PTS	EFF. BASE RATE	REPL. COST NEW	AYB	EYB	ECON	FNCT		NORM	% COND
0100	01	2,743	96.0960	96.10	263,602	1955	2010	0	0	0	7.00	93.00

1 SINGLE FAM – 100% - 2022 Heated Area: 2683 HX Base Yr 2022

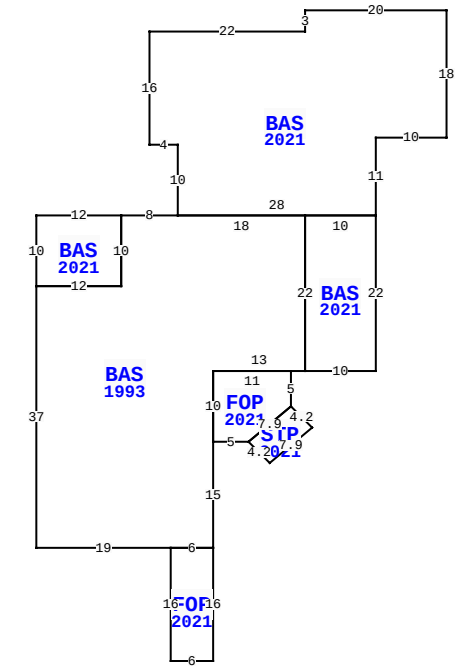

2117 ATLANTIC AVE, FERNANDINA BEACH

BLD DATE		LGL DATE	
XF DATE		LAND DATE	03/27/2024 MLU
INC DATE		AG DATE	

NASSAU COUNTY PROPERTY

PAGE 1 of 2 2

VALUATION SUMMARY

VALUATION BY		STANDARD
Tax Group: 2	Tax Dist:	
BUILDING MARKET VALUE		299,299
TOTAL MARKET OB/XF VALUE		61,686
TOTAL LAND VALUE - MARKET		390,400
TOTAL MARKET VALUE		751,385
SOH/AGL Deduction		164,277
ASSESSED VALUE		587,108
TOTAL EXEMPTION VALUE	HX HB	50,722
BASE TAXABLE VALUE		536,386
TOTAL JUST VALUE		751,385
NCON VALUE		0
INCOME VALUE		
PREVIOUS YEAR MKT VALUE		737,959

PERMIT NUM	DESCRIPTION	AMT	ISSUED
20211250	SWIM POOL	46,000	07/06/2022
20200034	ADDITION	0	02/07/2020
20200035	GARAGE	0	02/07/2020
983340	RE-ROOF	0	03/12/1998

SALES DATA

OFF RECORD Number	DATE	TYPE INST	Q / U	V / I	RSN CD	SALE PRICE
2264/1318	3/21/2019	WD	Q	I	01	335,000
GRANTOR: LEARY PATRICK R & MIC						
GRANTEE: SOLIER GEORGE A JR						
2150/0292	9/29/2017	FJ	U	I	11	0
GRANTOR: LEARY MARY CLEMENTA E						
GRANTEE: LEARY MICHAEL JOSEP						

BUILDING NOTES

BUILDING DIMENSIONS

BAS=[YR=2021] W20 S3 W22 S16 E4 S10 BAS=[YR=1993] W8
BAS=[YR=2021] W12 S10 E12 N10$ S10 W12 S37 E19 FOP=[YR=2021]
S16 E6 N16 W6$ E6 N15 FOP=[YR=2021] E5 STP=[YR=2021] D3 R3
U5 R6 U3 L3 D5 L6 $ U5 R6 N5 W11 S10$ N10
E13BAS=[YR=2021] E10 N22 W10 S22$ N22 W18$ E28 N11 E10 N18$.

EXTRA FEATURES

LN	OB/XF CODE	DESCRIPTION	BLD	CAP	L	W	UNITS	UT	Adj R	ADJ UNIT PRICE	ORIG COND	YEAR ON	YEAR ACTUAL	Q	% COND	OB/XF MKT VALUE	NOTES
1	0855	CONC PAVER	0	100	0	0	2,800.00	SF	10.00	10.00	100	2021	2021	3	99	27,720	
2	0861	POOL GUNIT	0	100	0	0	200.00	SF	85.00	85.00	100	2021	2021	3	93	15,810	
3	0855	CONC PAVER	0	100	2	32	64.00	SF	10.00	10.00	100	2021	2021	3	99	634	
4	0855	CONC PAVER	0	100	0	0	764.00	SF	10.00	10.00	100	2021	2021	3	99	7,564	
5	0855	CONC PAVER	0	100	0	0	824.00	SF	10.00	10.00	100	2021	2021	3	99	8,158	
6	0871	POOL HTR R	0	100	0	0	1.00	UT	2,000.00	2,000.00	100	2021	2021	3	90	1,800	

LAND DESCRIPTION

TOTAL OB/XF 61,686

LN	USE CODE	CLS	LAND USE DESCRIPTION	CAP	RD	LOC ZONE	FRONT	DEPTH	TOT LND UTS	UNIT TYPE	DT	DPTH FACT	% COND	TOT ADJ	UNIT PRICE	ADJ UNIT PRICE	LAND VALUE	OTHER ADJUSTMENTS AND NOTES	YEAR	DENSITY	DECL	FRZ	YR	CONSRV
1	000100	C	RES	100	0003	R-1	100.00	200.00	100.00	FF	1	1.22	1.00	1.22	3,200.00	3,904.00	390,400							

REVIEW DATE 01/03/2022 BY DJ Total Acres: 0.00 Total Land Value: 390,400 Market: 0 Agricultural: 0 Common: 390,400 PRINTED 07/30/2025 BY SYS

LOT W 100 FT OF 2
ALTA VISTA 2 PB 2/44

SOLIER GEORGE A JR & SUZANNE T
2117 ATLANTIC AVE
FERNANDINA BEACH, FL 32034

2025

00-00-31-100B-0002-0000

NASSAU COUNTY PROPERTY

BUILDING CHARACTERISTICS

ELEMENT	CD	CONSTRUCTION
Exterior Wall	11	BD/BTN AVG 50
Exterior Wall	15	CONC BLOCK 50
Roof Structur	03	GABLE/HIP 100
Roof Cover	03	COMP SHNGL 100
Interior Wall	05	DRYWALL 100
Interior Floo	13	LVT/LAMNT 100
Air Condition	03	CENTRAL 100
Heating Type	04	AIR DUCTED 100
Bedrooms		0 100
Bathrooms		0 100
Frame	03	MASONRY 100
Stories	2.	2. 100
Units		0 100
Occupancy	00	NONE 100
Quality	04	Quality Level 04
DOR CODE	0100	SINGLE FAMILY
MAP NUM		MKT AREA 01
NEIGHBORHOOD/LOC	1012.00	

AREA TYPE	TOTAL GROSS AREA	PCT OF BASE	YEAR	TOT ADJ AREA	SUBAREA MARKET VALUE
BAS	624	100	2021	624	34,727
FGR	624	55	2021	343	19,089
STR	64	10	2021	6	334
TOTALS	1,312			973	54,149

MARKET ADJUSTMENTS

TYPE	MDL	EFF. AREA	TOT ADJ PTS	EFF. BASE RATE	REPL. COST NEW	AYB	EYB	ECON	FNCT		NORM	% COND
0150	01	973	106.5960	56.50	54,974	2021	2021	0	0	0	1.50	98.50

2 ACCESORY U – 100% - 2022 Heated Area: 624 HX Base Yr 2022

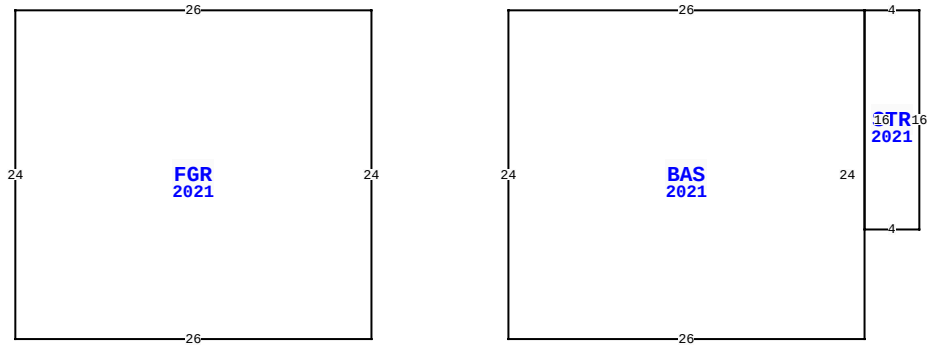

2117 ATLANTIC AVE, FERNANDINA BEACH

BLD DATE		LGL DATE	
XF DATE		LAND DATE	03/27/2024 MLU
INC DATE		AG DATE	

VALUATION SUMMARY

VALUATION BY		STANDARD
Tax Group: 2	Tax Dist:	
BUILDING MARKET VALUE		299,299
TOTAL MARKET OB/XF VALUE		61,686
TOTAL LAND VALUE - MARKET		390,400
TOTAL MARKET VALUE		751,385
SOH/AGL Deduction		164,277
ASSESSED VALUE		587,108
TOTAL EXEMPTION VALUE	HX HB	50,722
BASE TAXABLE VALUE		536,386
TOTAL JUST VALUE		751,385
NCON VALUE		0
INCOME VALUE		
PREVIOUS YEAR MKT VALUE		737,959

PERMIT NUM	DESCRIPTION	AMT	ISSUED

SALES DATA

OFF RECORD Number	DATE	TYPE INST	Q / U	V / I	RSN CD	SALE PRICE
2264/1318	3/21/2019	WD	Q	I	01	335,000
GRANTOR: LEARY PATRICK R & MIC						
GRANTEE: SOLIER GEORGE A JR						
2150/0292	9/29/2017	FJ	U	I	11	0
GRANTOR: LEARY MARY CLEMENTA E						
GRANTEE: LEARY MICHAEL JOSEP						

BUILDING NOTES

BUILDING DIMENSIONS

FGR=[YR=2021] W26 S24 E26 N24$ PTR= E10 BAS=[YR=2021] E26
STR=[YR=2021] E4 S16 W4 N16$ S24 W26 N24$ W10$.

EXTRA FEATURES

L N	OB/XF CODE	DESCRIPTION	BLD	CAP	L	W	UNITS	UT	Adj R	ADJ UNIT PRICE	ORIG COND	YEAR ON	YEAR ACTUAL	Q	% COND	OB/XF MKT VALUE	NOTES

LAND DESCRIPTION

TOTAL OB/XF 0

L N	USE CODE	CLS	LAND USE DESCRIPTION	CAP	R D	LOC ZONE	FRONT	DEPTH	TOT LND UTS	UNIT TYPE	D T	DPTH FACT	% COND	TOT ADJ	UNIT PRICE	ADJ UNIT PRICE	LAND VALUE	OTHER ADJUSTMENTS AND NOTES	YEAR	DENSITY	DECL	FRZ	YR	CONSRV

REVIEW DATE 01/03/2022 BY DJ Total Acres: 0.00 Total Land Value: 390,400 Market: 0 Agricultural: 0 Common: 390,400 PRINTED 07/30/2025 BY SYS