BLOCK D LOT N 87 1/2
FT OF 11 & 12
IN OR 505 PG 1161

GREEN EDWARD R
96316 GLENWOOD RD
YULEE, FL 32097

2025

00-00-31-100A-000D-0111

BUILDING CHARACTERISTICS

ELEMENT	CD	CONSTRUCTION
Exterior Wall	07	ASB SHNGLE 70
Exterior Wall	10	ABOVE AVG 30
Roof Structur	03	GABLE/HIP 100
Roof Cover	12	MODULAR MT 100
Interior Wall	05	DRYWALL 100
Interior Floo	12	HARDWOOD 80
Interior Floo	11	CLAY TILE 20
Air Condition	03	CENTRAL 100
Heating Type	04	AIR DUCTED 100
Bedrooms		2 100
Bathrooms		1 100
Frame	02	WOOD FRAME 100
Stories	1.	1. 100
Units		0 100
BUD8 Adjustme	02	DIST FB 100
Occupancy	00	NONE 100
Quality	03	Quality Level 03
DOR CODE	0100	SINGLE FAMILY
MAP NUM		MKT AREA 01
NEIGHBORHOOD/LOC	1008.00	

AREA TYPE	TOTAL GROSS AREA	PCT OF BASE	YEAR	TOT ADJ AREA	SUBAREA MARKET VALUE
BAS	925	100	1993	925	85,401
DCK	25	10	2010	2	185
DCK	41	10	2010	4	369
FOP	16	30	1993	5	462
FSP	140	40	2010	56	5,170
STR	12	10	2010	1	93
STR	15	10	2010	2	185
STR	16	10	2010	2	185
TOTALS	1,190			997	92,048

MARKET ADJUSTMENTS

TYPE	MDL	EFF. AREA	TOT ADJ PTS	EFF. BASE RATE	REPL. COST NEW	AYB	EYB	ECON	FNCT		NORM	% COND
0100	01	997	114.5880	114.59	114,246	1945	1995	0	0	0	19.43	80.57

1 SINGLE FAM – 0% - 0 Heated Area: 925 HX Base Yr

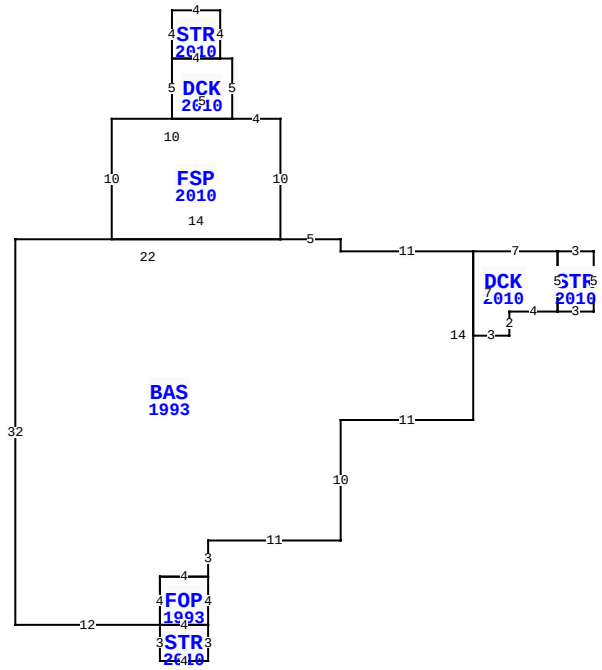

107 CITRONA DR, FERNANDINA BEACH

BLD DATE		LGL DATE	
XF DATE		LAND DATE	03/25/2024 MLU
INC DATE		AG DATE	

EXTRA FEATURES

LN	OB/XF CODE	DESCRIPTION	BLD	CAP	L	W	UNITS	UT	Adj R	ADJ UNIT PRICE	ORIG COND	YEAR ON	YEAR ACTUAL	Q	% COND	OB/XF MKT VALUE	NOTES
1	0810	CONCRETE A	0	0	0	0	450.00	SF	6.50	6.50	100	1990	1990	3	57	1,667	
2	0510	GARAGE WD-	0	0	0	0	372.00	SF	35.00	35.00	100	1990	1990	3	20	2,604	
3	0510	GARAGE WD-	0	0	18	12	216.00	SF	19.60	19.60	100	2000	2000	3	27	1,143	

NASSAU COUNTY PROPERTY

PAGE 1 of 1 2

VALUATION SUMMARY

VALUATION BY	STANDARD
Tax Group: 2	Tax Dist:
BUILDING MARKET VALUE	92,048
TOTAL MARKET OB/XF VALUE	5,414
TOTAL LAND VALUE - MARKET	246,400
TOTAL MARKET VALUE	343,862
SOH/AGL Deduction	102,222
ASSESSED VALUE	241,640
TOTAL EXEMPTION VALUE	0
BASE TAXABLE VALUE	241,640
TOTAL JUST VALUE	343,862
NCON VALUE	0
INCOME VALUE	
PREVIOUS YEAR MKT VALUE	340,112

PERMIT NUM	DESCRIPTION	AMT	ISSUED
20101849	XFOB	6,800	10/26/2010
20071012	REPAIR/RRF	5,700	06/06/2007
20032456	CHNGE SRVC	1,000	02/05/2003
5910	REPAIR/RRF	1,000	04/10/1990

SALES DATA

OFF RECORD Number	DATE	TYPE INST	Q / U	V / I	RSN CD	SALE PRICE
0505/1161	12/01/1986	WD	U	I		35,000
GRANTOR:						
GRANTEE:						
0505/1160	12/01/1986	FS	U	I		100
GRANTOR:						
GRANTEE:						

BUILDING NOTES

BUILDING DIMENSIONS

STR=[YR=2010] W3 DCK=[YR=2010] W7 BAS=[YR=1993] W11N1W5 FSP=[YR=2010] N10W4 DCK=[YR=2010] N5W1STR=[YR=2010] N4W4S4E4$ W4S5E5$ W10S10 E14$ W22 S32E12 STR=[YR=2010] S3E4N3 FOP=[YR=1993] N4W4S4 E4$ W4$ N4E4N3E11 N10E11 N14$ S7E3N2E4N5$ S5E3N5$.

LAND DESCRIPTION

TOTAL OB/XF 5,414

LN	USE CODE	CLS	LAND USE DESCRIPTION	CAP	RD	LOC ZONE	FRONT	DEPTH	TOT LND UTS	UNIT TYPE	DT	DPTH FACT	% COND	TOT ADJ	UNIT PRICE	ADJ UNIT PRICE	LAND VALUE	OTHER ADJUSTMENTS AND NOTES	YEAR	DENSITY	DECL	FRZ	YR	CONSRV
1	000100	C	RES	0	0006	R-1	88.00	100.00	88.00	FF		1.00	1.00	1.00	2,800.00	2,800.00	246,400							

REVIEW DATE 01/14/2021 BY TWA Total Acres: 0.00 Total Land Value: 246,400 Market: 0 Agricultural: 0 Common: 246,400 PRINTED 07/30/2025 BY SYS