LOT 2
IN OR 791/1941
OCEAN WALK PB 5/373

MOORE DWIGHT A JR
4905 SPANISH OAKS CIRCLE
FERNANDINA BEACH, FL 32034

2025

00-00-30-155W-0002-0000

BUILDING CHARACTERISTICS

ELEMENT	CD	CONSTRUCTION
Exterior Wall	05	AVERAGE 90
Exterior Wall	14	WD SHINGLE 10
Roof Structur	03	GABLE/HIP 100
Roof Cover	03	COMP SHNGL 100
Interior Wall	05	DRYWALL 100
Interior Floo	14	CARPET 70
Interior Floo	11	CLAY TILE 30
Air Condition	03	CENTRAL 100
Heating Type	04	AIR DUCTED 100
Bedrooms		3 100
Bathrooms		2 100
Frame	02	WOOD FRAME 100
Stories	1.	1. 100
Units		0 100
Quality	03	Quality Level 03
DOR CODE	0100	SINGLE FAMILY
MAP NUM		MKT AREA 03
NEIGHBORHOOD/LOC	3033.00	

AREA TYPE	TOTAL GROSS AREA	PCT OF BASE	YEAR	TOT ADJ AREA	SUBAREA MARKET VALUE
BAS	1,847	100	1994	1,847	338,303
FEP	168	80	2002	134	24,544
FGR	484	55	1994	266	48,721
FOP	126	30	1994	38	6,960
TOTALS	2,625			2,285	418,528

MARKET ADJUSTMENTS

TYPE	MDL	EFF. AREA	TOT ADJ PTS	EFF. BASE RATE	REPL. COST NEW	AYB	EYB	ECON	FNCT		NORM	% COND
0500	11	2,285	136.0348	214.93	491,115	1994	1994	0	0	0	14.78	85.22

1 SFR CUST – 100% - 1998 Heated Area: 1847 HX Base Yr 1998

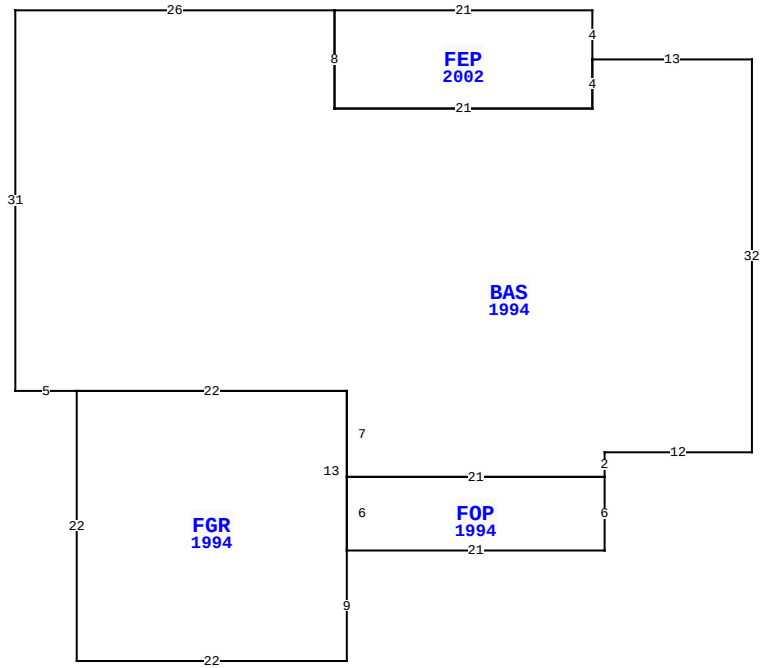

BLD DATE	03/03/2023 NW	LGL DATE	
XF DATE		LAND DATE	03/14/2024 MLU
INC DATE		AG DATE	

4905 SPANISH OAKS CIR, FERNANDINA BEACH

NASSAU COUNTY PROPERTY

PAGE 1 of 1 8

VALUATION SUMMARY

VALUATION BY		STANDARD
Tax Group: 8	Tax Dist:	
BUILDING MARKET VALUE		418,528
TOTAL MARKET OB/XF VALUE		15,569
TOTAL LAND VALUE - MARKET		350,000
TOTAL MARKET VALUE		784,097
SOH/AGL Deduction		541,499
ASSESSED VALUE		242,598
TOTAL EXEMPTION VALUE	HX HB	50,722
BASE TAXABLE VALUE		191,876
TOTAL JUST VALUE		784,097
NCON VALUE		0
INCOME VALUE		
PREVIOUS YEAR MKT VALUE		711,798

PERMIT NUM	DESCRIPTION	AMT	ISSUED
22013136	REMODEL	15,825	08/26/2022
R1213234	REMODEL	8,200	11/01/2012
V000070	REPAIR/RRF	0	02/01/2000
B94-0550	NEW CONSTR	114,540	10/01/1993

SALES DATA

OFF RECORD Number	DATE	TYPE INST	Q / U	V / I	RSN CD	SALE PRICE
0791/1941	5/01/1997	WD	Q	I		174,900
GRANTOR: JANICAK DAN C & KATHR						
GRANTEE: MOORE DWIGHT A JR						
0751/1889	2/20/1996	QC	Q	I	01	100
GRANTOR: JANICAK DAN C						
GRANTEE: JANICAK DAN & KATHR						

BUILDING NOTES

BUILDING DIMENSIONS

BAS=[YR=1994;ORIG=0,0] W13 S4 W21 N8 W26 S31 E5 E22 S7 E21 N2 E12 N32 $
FGR=[YR=1994;ORIG=-55,27] S22 E22 N9 N13 W22 $
FEP=[YR=2002;ORIG=-13,0] N4 W21 S8 E21 N4 $
FOP=[YR=1994;ORIG=-33,40] E21 N6 W21 S6 $
.

EXTRA FEATURES

LN	OB/XF CODE	DESCRIPTION	BLD	CAP	L	W	UNITS	UT	Adj R	ADJ UNIT PRICE	ORIG COND	YEAR ON	YEAR ACTUAL	Q	% COND	OB/XF MKT VALUE	NOTES
1	0504	FP-ELECTRI	0	100	0	0	1.00	UT	2,000.00	2,000.00	100	1994	1994	3	74	1,480	
2	0855	CONC PAVER	0	100	0	0	1,165.00	SF	10.00	10.00	100	2021	2021	3	99	11,534	
3	0855	CONC PAVER	0	100	0	0	191.00	SF	10.00	10.00	100	2021	2021	3	99	1,891	
4	0855	CONC PAVER	0	100	10	8	80.00	SF	10.00	10.00	100	2004	2004	3	83	664	

LAND DESCRIPTION

TOTAL OB/XF 15,569

LN	USE CODE	CLS	LAND USE DESCRIPTION	CAP	RD	LOC ZONE	FRONT	DEPTH	TOT LND UTS	UNIT TYPE	DT	DPTH FACT	% COND	TOT ADJ	UNIT PRICE	ADJ UNIT PRICE	LAND VALUE	OTHER ADJUSTMENTS AND NOTES	YEAR	DENSITY	DECL	FRZ	YR	CONSRV
1	000100	C	RES	100		RSF-1	0.00	0.00	1.00	LT		1.00	1.00	1.00	350,000.00	350,000.00	350,000							

REVIEW DATE 03/15/2023 BY DJ Total Acres: 0.00 Total Land Value: 350,000 Market: 0 Agricultural: 0 Common: 350,000 PRINTED 07/30/2025 BY SYS