LOT 14
IN OR 943/381
THE BREAKERS @ OCEAN REACH #1

HAMER STUART R
2898 BREAKERS DR
FERNANDINA BEACH, FL 32034

2025

00-00-30-085B-0014-0000

BUILDING CHARACTERISTICS

ELEMENT	CD	CONSTRUCTION
Exterior Wall	16	WD FR STUC 100
Roof Structur	08	IRREGULAR 100
Roof Cover	03	COMP SHNGL 100
Interior Wall	05	DRYWALL 100
Interior Floo	14	CARPET 80
Interior Floo	11	CLAY TILE 20
Air Condition	03	CENTRAL 100
Heating Type	04	AIR DUCTED 100
Bedrooms		4 100
Bathrooms		2.5 100
Frame	02	WOOD FRAME 100
Stories	2.	2. 100
Units		0 100
Occupancy	00	NONE 100
Quality	06	Quality Level 06

DOR CODE 0100 SINGLE FAMILY
MAP NUM | MKT AREA 02
NEIGHBORHOOD/LOC 2031.00

AREA TYPE	TOTAL GROSS AREA	PCT OF BASE	YEAR	TOT ADJ AREA	SUBAREA MARKET VALUE
BAS	1,782	100	1997	1,782	240,248
FGR	484	55	1997	266	35,862
FOP	16	30	1997	5	674
FOP	240	30	1997	72	9,707
FUS	908	100	1997	908	122,416
TOTALS	3,430			3,033	408,905

MARKET ADJUSTMENTS

TYPE	MDL	EFF. AREA	TOT ADJ PTS	EFF. BASE RATE	REPL. COST NEW	AYB	EYB	ECON	FNCT		NORM	% COND
0900	01	3,033	118.0728	155.86	472,723	1997	1997	0	0	0	13.50	86.50

1 SNGL FAM – 100% - 2001 Heated Area: 2690 HX Base Yr 2001

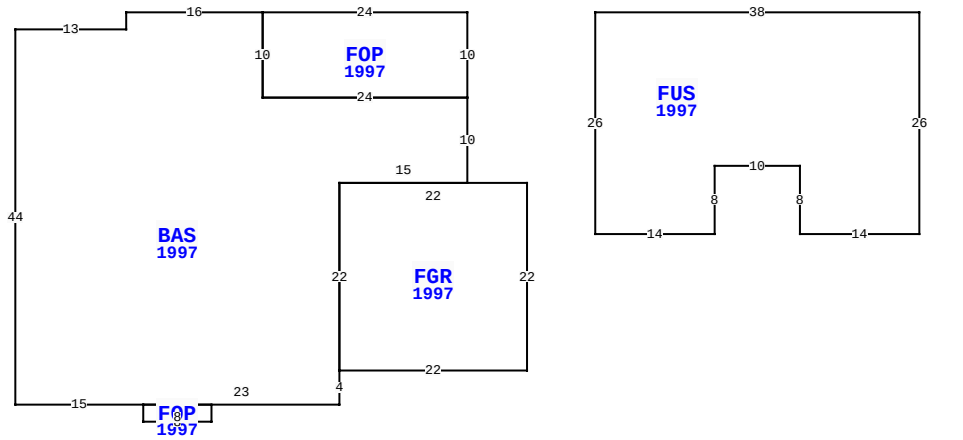

BLD DATE		LGL DATE	
XF DATE		LAND DATE	04/28/2025 MLU
INC DATE		AG DATE	

2898 BREAKERS DR, FERNANDINA BEACH

NASSAU COUNTY PROPERTY

PAGE 1 of 1 8

VALUATION SUMMARY

VALUATION BY		STANDARD
Tax Group: 8	Tax Dist:	
BUILDING MARKET VALUE		408,905
TOTAL MARKET OB/XF VALUE		7,538
TOTAL LAND VALUE - MARKET		275,000
TOTAL MARKET VALUE		691,443
SOH/AGL Deduction		365,154
ASSESSED VALUE		326,289
TOTAL EXEMPTION VALUE	HX HB	50,722
BASE TAXABLE VALUE		275,567
TOTAL JUST VALUE		691,443
NCON VALUE		0
INCOME VALUE		
PREVIOUS YEAR MKT VALUE		647,086

PERMIT NUM	DESCRIPTION	AMT	ISSUED
B9703687	NEW CONSTR	133,350	01/01/1997

SALES DATA

OFF RECORD Number	DATE	TYPE INST	Q U	V I	RSN CD	SALE PRICE
0943/0381	8/02/2000	WD	Q	I		247,500
GRANTOR: DEVLIN STEPHEN J & JA						
GRANTEE: HAMER STUART R						
0797/1832	6/26/1997	WD	Q	I		207,300
GRANTOR: PANITZ HOMES						
GRANTEE: DEVLIN STEPHEN J &						

BUILDING NOTES

BUILDING DIMENSIONS

FOP=[YR=1997] W24 BAS=[YR=1997] W16 S2 W13 S44 E15
FOP=[YR=1997] S2 E8 N2 W8$ E23 N4 FGR=[YR=1997] E22 N22 W22
S22 $ N22 E15 N10 W24 N10$ S10 E24 N10$ PTR=E15 FUS=[YR=1997]
E38 S26 W14 N8 W10 S8 W14 N26$ W15$.

EXTRA FEATURES

LN	OB/XF CODE	DESCRIPTION	BLD	CAP	L	W	UNITS	UT	Adj R	ADJ UNIT PRICE	ORIG COND	YEAR ON	YEAR ACTUAL	Q	% COND	OB/XF MKT VALUE	NOTES
1	0500	FP-PRE FAB	0	100	0	0	1.00	UT	3,500.00	3,500.00	100	1997	1997	3	79	2,765	
2	0812	CONCRETE C	0	100	0	0	1,428.00	SF	4.00	4.00	100	1997	1997	3	72	4,113	
3	0810	CONCRETE A	0	100	47	3	141.00	SF	6.50	6.50	100	1997	1997	3	72	660	

LAND DESCRIPTION

TOTAL OB/XF 7,538

LN	USE CODE	CLS	LAND USE DESCRIPTION	CAP	RD	LOC ZONE	FRONT	DEPTH	TOT LND UTS	UNIT TYPE	DT	DPTH FACT	% COND	TOT ADJ	UNIT PRICE	ADJ UNIT PRICE	LAND VALUE	OTHER ADJUSTMENTS AND NOTES	YEAR	DENSITY	DECL	FRZ	YR	CONSRV
1	000100	C	RES	100		RSF-2	0.00	0.00	1.00	LT		1.00	1.00	1.00	275,000.00	275,000.00	275,000							

REVIEW DATE 08/02/2022 BY KBA Total Acres: 0.00 Total Land Value: 275,000 Market: 0 Agricultural: 0 Common: 275,000 PRINTED 07/30/2025 BY SYS