LOT 12 & PT OF LOT 15
IN OR 2411/171
EX ESMT OR 262/356 & 602/1016

AMELIA SDC LLC
C/O SAGLO DEVELOPMENT CORP, 290 NW 165TH ST PH-2
MIAMI, FL 33169

2025

00-00-30-0800-0012-0000

NASSAU COUNTY PROPERTY

BUILDING CHARACTERISTICS

ELEMENT	CD	CONSTRUCTION
Exterior Wall	15	CONC BLOCK 70
Exterior Wall	17	CB STUCCO 30
Roof Structur	09	RIDGE FRME 100
Roof Cover	04	BUILT-UP 100
Interior Wall	05	DRYWALL 100
Interior Floo	13	LVT/LAMNT 60
Interior Floo	15	HARDTILE 40
Ceiling	01	FIN.SUSPD 100
Air Condition	04	ROOF TOP 100
Heating Type	04	AIR DUCTED 100
Fixtures		32 100
Frame	03	MASONRY 100
Story Height		15 100
RMS		15 100
Stories	1.	1. 100
Units		0 100
BUD8 Adjustme	05	DIST 1A 100
Occupancy	00	NONE 100
Quality	03	Quality Level 03

DOR CODE	1600	COMMUNITY SHOPPING	
MAP NUM		MKT AREA	01
NEIGHBORHOOD/LOC	2004.00		

AREA TYPE	TOTAL GROSS AREA	PCT OF BASE	YEAR	TOT ADJ AREA	SUBAREA MARKET VALUE
BAS	816	100	1993	816	21,342
BAS	1,020	100	1993	1,020	26,677
BAS	1,020	100	1993	1,020	26,677
BAS	1,224	100	1993	1,224	32,012
BAS	1,224	100	1993	1,224	32,012
BAS	1,836	100	1993	1,836	48,019
CAN	1,592	30	1993	478	12,502
TOTALS	8,732			7,618	199,241

MARKET ADJUSTMENTS

TYPE	MDL	EFF. AREA	TOT ADJ PTS	EFF. BASE RATE	REPL. COST NEW	AYB	EYB	ECON	FNCT	AP	NORM	% COND
1601	04	7,618	117.8070	130.77	996,206	1987	1987	0	0	30	50.00	20.00

1 COMNTYSHOP – 0% - 0 Heated Area: 7140 HX Base Yr

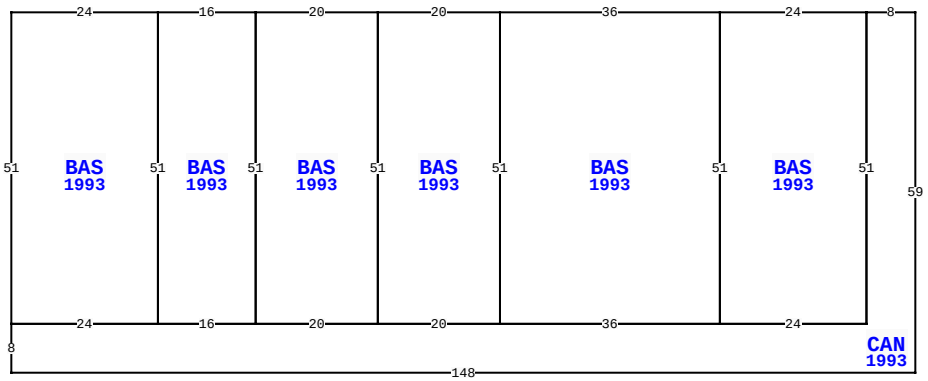

1722 S 8TH ST, FERNANDINA BEACH

BLD DATE	11/14/2024	KW	LGL DATE		
XF DATE	11/14/2024	KW	LAND DATE	04/09/2025	DC
INC DATE			AG DATE		

EXTRA FEATURES

LN	OB/XF CODE	DESCRIPTION	BLD	CAP	L	W	UNITS	UT	Adj R	ADJ UNIT PRICE	ORIG COND	YEAR ON	YEAR ACTUAL	Q	% COND	OB/XF MKT VALUE	NOTES
1	0966	FIRE SPRNK	0	0	0	0	95,068.00	SF	4.20	4.20	1	1987	1987	3	1	3,993	
2	0811	CONCRETE B	0	0	0	0	859.00	SF	5.20	5.20	1	1978	1978	3	1	45	
3	0090	AUTO DOOR	0	0	0	0	4.00	UT	2,500.00	2,500.00	1	1987	1987	3	1	100	
4	0812	CONCRETE C	0	0	0	0	5,037.00	SF	4.00	4.00	1	1978	1978	3	1	201	
5	0972	ST LGHT UN	0	0	0	0	2.00	UT	3,795.00	3,795.00	1	1978	1978	3	1	76	
6	0400	CONC CURB	0	0	0	0	1,879.00	LF	15.00	15.00	1	1978	1978	3	1	282	
7	0400	CONC CURB	0	0	0	0	1,823.00	LF	15.00	15.00	1	1987	1987	3	1	273	
8	0803	ASPHALT C	0	0	0	0	247,400.00	SF	2.00	2.00	1	1995	1995	3	1	4,948	
9	0972	ST LGHT UN	0	0	0	0	6.00	UT	3,289.00	3,289.00	1	1987	1987	3	1	197	
10	0975	ST LT/ARM	0	0	0	0	11.00	UT	500.00	500.00	1	1978	1978	3	1	55	

TOTAL OB/XF 10,170

VALUATION SUMMARY

VALUATION BY	DIRECT_CAP
Tax Group: 2	Tax Dist:
BUILDING MARKET VALUE	3,100,302
TOTAL MARKET OB/XF VALUE	0
TOTAL LAND VALUE - MARKET	0
TOTAL MARKET VALUE	3,100,302
SOH/AGL Deduction	0
ASSESSED VALUE	3,100,302
TOTAL EXEMPTION VALUE	0
BASE TAXABLE VALUE	3,100,302
TOTAL JUST VALUE	3,100,302
NCON VALUE	0
INCOME VALUE	3,100,302
PREVIOUS YEAR MKT VALUE	3,100,302

AMELIA PLAZA SHOPPING CENTER

PERMIT NUM	DESCRIPTION	AMT	ISSUED
2025-0054	SAYLORS ACCOUNTIN	0	03/31/2025
2025-0053	LED CHANNEL LETTE		03/28/2025
BLDC-2023-0	scrape columns an	8,000	12/19/2023
SIGN-2023-0	- CODE NINJAS -	1,500	12/12/2023
20230062	SHELL 1720 8TH	50,000	09/13/2023
20230067	SHELL 1726 8TH	90,000	09/08/2023

SALES DATA

OFF RECORD Number	DATE	TYPE INST	Q / U	V / I	RSN CD	SALE PRICE
2411/0171	11/20/2020	SW	Q	I	01	4,100,000
GRANTOR: AMELIA IMPROVEMENTS L						
GRANTEE: AMELIA SDC LLC						
1463/0849	12/05/2006	WD	U	I	09	4,900,000
GRANTOR: EDENS & AVANT FINANCI						
GRANTEE: AMELIA IMPROVEMENTS						

BUILDING NOTES

BUILDING DIMENSIONS

BAS=[YR=1993;LABEL=units:1722:1726;ORIG=-68,0] E36 S51 W36 N51 $
CAN=[YR=1993;ORIG=0,0] W8 S51 W24 W36 W20 W20 W16 W24 S8 E148 N59 $
BAS=[YR=1993;LABEL=unit:1702s8th st;ORIG=-124,0] W24 S51 E24 N51 $
BAS=[YR=1993;LABEL=unit:1734;ORIG=-32,0] E24 S51 W24 N51 $
BAS=[YR=1993;LABEL=unit:1714;ORIG=-108,0] E20 S51 W20 N51 $
BAS=[YR=1993;LABEL=unit:1720;ORIG=-88,0] E20 S51 W20 N51 $
BAS=[YR=1993;LABEL=unit:1708;ORIG=-124,0] E16 S51 W16 N51 $
.

LAND DESCRIPTION

LN	USE CODE	CLS	LAND USE DESCRIPTION	CAP	RD	LOC ZONE	FRONT	DEPTH	TOT LND UTS	UNIT TYPE	DT	DPTH FACT	% COND	TOT ADJ	UNIT PRICE	ADJ UNIT PRICE	LAND VALUE	OTHER ADJUSTMENTS AND NOTES	YEAR	DENSITY	DECL	FRZ	YR	CONSRV
1	001600	C	SH CTR COM	0	0003	C-2	0.00	0.00	469,994.00	SF		1.00	1.00	1.00	5.00	5.00	2,349,970							

REVIEW DATE 06/30/2025 BY KWX Total Acres: 10.79 Total Land Value: 0 Market: 0 Agricultural: 0 Common: 0 PRINTED 07/30/2025 BY SYS

LOT 12 & PT OF LOT 15
IN OR 2411/171
EX ESMT OR 262/356 & 602/1016

AMELIA SDC LLC
C/O SAGLO DEVELOPMENT CORP, 290 NW 165TH ST PH-2
MIAMI, FL 33169

2025

00-00-30-0800-0012-0000

NASSAU COUNTY PROPERTY

BUILDING CHARACTERISTICS

ELEMENT	CD	CONSTRUCTION
Exterior Wall	17	CB STUCCO 80
Exterior Wall	28	GLASS THRM 20
Roof Structur	09	RIDGE FRME 100
Roof Cover	04	BUILT-UP 100
Interior Wall	01	MINIMUM 100
Interior Floo	03	CONC FINSH 100
Ceiling	04	NONE 100
Air Condition	01	NONE 100
Heating Type	01	NONE 100
Fixtures		0 100
Frame	03	MASONRY 100
Story Height		19 100
RMS		1 100
Stories	1.	1. 100
Units		0 100
BUD8 Adjustme	05	DIST 1A 100
Occupancy	00	NONE 100
Quality	03	Quality Level 03
DOR CODE	1600	COMMUNITY SHOPPING
MAP NUM		MKT AREA 01
NEIGHBORHOOD/LOC	2004.00	

AREA TYPE	TOTAL GROSS AREA	PCT OF BASE	YEAR	TOT ADJ AREA	SUBAREA MARKET VALUE
BAS	9,125	100	1993	9,125	144,394
BAS	1,898	100	1994	1,898	30,034
CAN	70	30	1993	21	332
CAN	1,022	30	1994	307	4,858
FST	119	50	1993	60	949
PTO	224	5	1993	11	174
TOTALS	12,458			11,422	180,742

MARKET ADJUSTMENTS

TYPE	MDL	EFF. AREA	TOT ADJ PTS	EFF. BASE RATE	REPL. COST NEW	AYB	EYB	ECON	FNCT	AP	NORM	% COND
1601	04	11,422	71.2774	79.12	903,709	1978	1978	0	0	30	50.00	20.00

2 COMNTYSHOP - 0% - 0 Heated Area: 11023 HX Base Yr

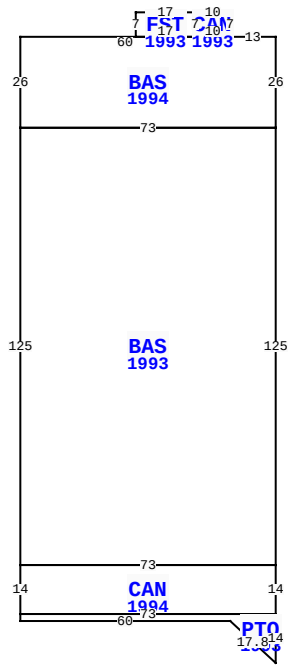

BLD DATE	11/14/2024	KW	LGL DATE
XF DATE	11/14/2024	KW	LAND DATE 04/09/2025 DC
INC DATE			AG DATE

1722 S 8TH ST, FERNANDINA BEACH

VALUATION SUMMARY

VALUATION BY	DIRECT_CAP
Tax Group: 2	Tax Dist:
BUILDING MARKET VALUE	3,100,302
TOTAL MARKET OB/XF VALUE	0
TOTAL LAND VALUE - MARKET	0
TOTAL MARKET VALUE	3,100,302
SOH/AGL Deduction	0
ASSESSED VALUE	3,100,302
TOTAL EXEMPTION VALUE	0
BASE TAXABLE VALUE	3,100,302
TOTAL JUST VALUE	3,100,302
NCON VALUE	0
INCOME VALUE	3,100,302
PREVIOUS YEAR MKT VALUE	3,100,302

PERMIT NUM	DESCRIPTION	AMT	ISSUED
20230066	SHELL 1375 AMELIA	94,950	09/08/2023
20230064	SHELL 1271 AMELI	88,350	09/08/2023
20230063	SHELL 1255 AMELI	53,050	09/08/2023
20230061	SHELL 1708 8TH	40,000	09/08/2023
BLDC-2023-0	SHELL 1121 AMELI	120,000	09/08/2023
BLDC-2023-0	SHELL 1059 AMELI	80,800	09/08/2023

SALES DATA

OFF RECORD Number	DATE	TYPE INST	Q / U	V / I	RSN CD	SALE PRICE
2411/0171	11/20/2020	SW	Q	I	01	4,100,000
GRANTOR: AMELIA IMPROVEMENTS L						
GRANTEE: AMELIA SDC LLC						
1463/0849	12/05/2006	WD	U	I	09	4,900,000
GRANTOR: EDENS & AVANT FINANCI						
GRANTEE: AMELIA IMPROVEMENTS						

BUILDING NOTES

BUILDING DIMENSIONS

BAS=[YR=1993;LABEL=unit:861;ORIG=-73,26] S125 E73 N125 W73 $
BAS=[YR=1994;ORIG=0,0] W13 W60 S26 E73 N26 $
CAN=[YR=1994;ORIG=-73,151] S14 E73 N14 W73 $
PTO=[YR=1993;ORIG=-73,165] S2 E60 D12R13 N14 W73 $
FST=[YR=1993;ORIG=-23,-7] W17 S7 E17 N7 $
CAN=[YR=1993;ORIG=-13,0] N7 W10 S7 E10 $
.

EXTRA FEATURES

LN	OB/XF CODE	DESCRIPTION	BLD	CAP	L	W	UNITS	UT	Adj R	ADJ UNIT PRICE	ORIG COND	YEAR ON	YEAR ACTUAL	Q	% COND	OB/XF MKT VALUE	NOTES
15	0402	CONC BUMPE	0	0	0	0	40.00	UT	25.00	25.00	1	2002	2002	3	1	10	
16	0418	EXHST FAN	0	0	0	0	3.00	UT	400.00	400.00	1	1987	1987	3	1	12	
18	0418	EXHST FAN	0	0	0	0	5.00	UT	400.00	400.00	1	1987	1987	3	1	20	
19	0964	HALON SYST	0	0	42	4	168.00	SF	50.00	50.00	1	1987	1987	3	1	84	
20	0964	HALON SYST	0	0	16	5	80.00	SF	50.00	50.00	1	1987	1987	3	1	40	
21	0964	HALON SYST	0	0	12	4	48.00	SF	50.00	50.00	1	1987	1987	3	1	24	
22	0142	BAR TOP A	0	0	0	0	20.00	LF	165.00	165.00	1	1987	1987	3	1	33	
23	0418	EXHST FAN	0	0	0	0	1.00	UT	400.00	400.00	1	2001	2001	3	1	4	
24	0964	HALON SYST	0	0	4	22	88.00	SF	50.00	50.00	1	2001	2001	3	1	44	
25	0418	EXHST FAN	0	0	0	0	1.00	UT	400.00	400.00	1	2012	2012	3	1	4	

TOTAL OB/XF 275

LAND DESCRIPTION

LN	USE CODE	CLS	LAND USE DESCRIPTION	CAP	RD	LOC ZONE	FRONT	DEPTH	TOT LND UTS	UNIT TYPE	DT	DPTH FACT	% COND	TOT ADJ	UNIT PRICE	ADJ UNIT PRICE	LAND VALUE	OTHER ADJUSTMENTS AND NOTES	YEAR	DENSITY	DECL	FRZ	YR	CONSRV

REVIEW DATE 06/30/2025 BY KWX Total Acres: 10.79 Total Land Value: 0 Market: 0 Agricultural: 0 Common: 0 PRINTED 07/30/2025 BY SYS

LOT 12 & PT OF LOT 15
IN OR 2411/171
EX ESMT OR 262/356 & 602/1016

AMELIA SDC LLC
C/O SAGLO DEVELOPMENT CORP, 290 NW 165TH ST PH-2
MIAMI, FL 33169

2025

00-00-30-0800-0012-0000

BUILDING CHARACTERISTICS

ELEMENT	CD	CONSTRUCTION
Exterior Wall	17	CB STUCCO 100
Roof Structur	09	RIDGE FRME 100
Roof Cover	04	BUILT-UP 100
Interior Wall	05	DRYWALL 90
Interior Wall	01	MINIMUM 10
Interior Floo	07	CORK/VTILE 90
Interior Floo	03	CONC FINSH 10
Ceiling	01	FIN.SUSPD 100
Air Condition	04	ROOF TOP 100
Heating Type	04	AIR DUCTED 100
Fixtures		28 100
Frame	03	MASONRY 100
Story Height		19 100
RMS		5 100
Stories	1.	1. 100
Units		0 100
BUD8 Adjustme	05	DIST 1A 100
Occupancy	00	NONE 100
Quality	03	Quality Level 03
DOR CODE	1600	COMMUNITY SHOPPING
MAP NUM		MKT AREA 01
NEIGHBORHOOD/LOC	2004.00	

AREA TYPE	TOTAL GROSS AREA	PCT OF BASE	YEAR	TOT ADJ AREA	SUBAREA MARKET VALUE
BAS	35,595	100	1993	35,595	831,855
CAN	350	30	1993	105	2,454
CAN	2,668	30	1994	800	18,696
FAT	1,288	20	1993	258	6,029
FUS	544	100	1993	544	12,713
KTA	3,249	110	2008	3,574	83,524
PTO	1,002	5	1993	50	1,169
SFB	8,908	80	1993	7,126	166,535
TOTALS	53,604			48,052	1,122,975

MARKET ADJUSTMENTS

TYPE	MDL	EFF. AREA	TOT ADJ PTS	EFF. BASE RATE	REPL. COST NEW	AYB	EYB	ECON	FNCT	AP	NORM	% COND
1401	04	48,052	95.1957	116.85	5,614,876	1978	1978	0	0	30	50.00	20.00

3 SUPER MRKT - 0% - 0 Heated Area: 46772 HX Base Yr

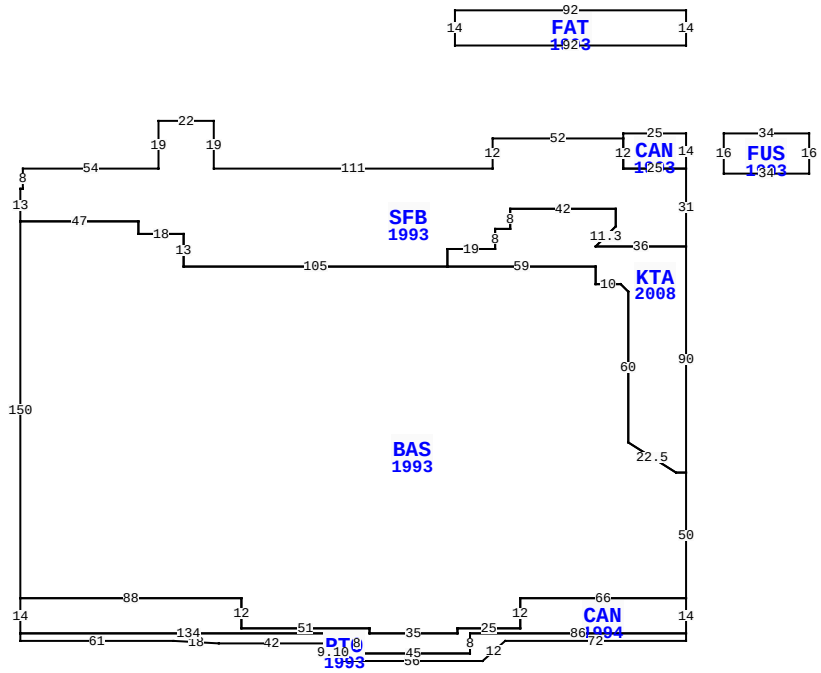

BLD DATE	11/14/2024 KW	LGL DATE	
XF DATE	11/14/2024 KW	LAND DATE	04/09/2025 DC
INC DATE		AG DATE	

1722 S 8TH ST, FERNANDINA BEACH

NASSAU COUNTY PROPERTY

PAGE 3 of 5 2

VALUATION SUMMARY

VALUATION BY	DIRECT_CAP
Tax Group: 2	Tax Dist:
BUILDING MARKET VALUE	3,100,302
TOTAL MARKET OB/XF VALUE	0
TOTAL LAND VALUE - MARKET	0
TOTAL MARKET VALUE	3,100,302
SOH/AGL Deduction	0
ASSESSED VALUE	3,100,302
TOTAL EXEMPTION VALUE	0
BASE TAXABLE VALUE	3,100,302
TOTAL JUST VALUE	3,100,302
NCON VALUE	0
INCOME VALUE	3,100,302
PREVIOUS YEAR MKT VALUE	3,100,302

PERMIT NUM	DESCRIPTION	AMT	ISSUED
SIGN-2023-0	WALL SIGN - FRESH		07/05/2023
20210064	ROOF	0	05/03/2021
20200062	REMODEL-1734 S 8T	161,702	06/25/2020
20190104	REMODEL	35,000	12/06/2019
20184163	REMODEL	9,500	12/10/2018
20183534	REPAIR/RRF	32,000	10/12/2018

SALES DATA

OFF RECORD Number	DATE	TYPE INST	Q / U	V / I	RSN CD	SALE PRICE
2411/0171	11/20/2020	SW	Q	I	01	4,100,000
GRANTOR: AMELIA IMPROVEMENTS L						
GRANTEE: AMELIA SDC LLC						
1463/0849	12/05/2006	WD	U	I	09	4,900,000
GRANTOR: EDENS & AVANT FINANCI						
GRANTEE: AMELIA IMPROVEMENTS						

BUILDING NOTES

EXTRA FEATURES

LN	OB/XF CODE	DESCRIPTION	BLD	CAP	L	W	UNITS	UT	Adj R	ADJ UNIT PRICE	ORIG COND	YEAR ON	YEAR ACTUAL	Q	% COND	OB/XF MKT VALUE	NOTES
26	0964	HALON SYST	0	0	5	9	45.00	SF	50.00	50.00	1	1987	1987	3	1	23	
28	4950	BOLLARD	0	0	0	0	9.00	UT	100.00	100.00	1	2007	2007	3	1	9	
29	4950	BOLLARD	0	0	0	0	7.00	UT	100.00	100.00	1	1987	1987	3	1	7	
30	4950	BOLLARD	0	0	0	0	12.00	UT	100.00	100.00	1	1978	1978	3	1	12	
31	4950	BOLLARD	0	0	0	0	42.00	UT	100.00	100.00	1	1978	1978	3	1	42	
32	4950	BOLLARD	0	0	0	0	5.00	UT	100.00	100.00	1	1987	1987	3	1	5	
33	4950	BOLLARD	0	0	0	0	13.00	UT	100.00	100.00	1	1987	1987	3	1	13	
35	0963	FIRE HYDR	0	0	0	0	3.00	UT	1,500.00	1,500.00	1	1987	1987	3	1	45	

BUILDING DIMENSIONS

BAS=[YR=1993;LABEL=Unit:947:Winn Dixie;ORIG=-265,35] S150 E88 S12 E51 S2 E35 N2 E25 N12 E66 N50 W4 U12L19 N60 U3L3 W10 N7 W59 W105 N13 W18 N5 W47 $
SFB=[YR=1993;LABEL=stock room;ORIG=-25,2] W52 S12 W111 N19 W22 S19 W54 S8 W1 S13 E47 S5 E18 S13 E105 N7 E19 N8 E6 N8 E42 S7 D8L8 E36 N31 W25 N12 $
KTA=[YR=2008;ORIG=0,135] N90 W36 U8R8 N7 W42 S8 W6 S8 W19 S7 E59 S7 E10 D3R3 S60 D12R19 E4 $
CAN=[YR=1994;ORIG=-265,185] S14 E134 S8 E45 N8 E86 N14 W66 S12 W25 S2 W35 N2 W51 N12 W88 $
FAT=[YR=1993;ORIG=0,-35] N14 W92 S14 E92 $
PTO=[YR=1993;ORIG=-265,199] S3 E61 D1R18 E42 D7R7 E56 U8R9

LAND DESCRIPTION

TOTAL OB/XF 156

LN	USE CODE	CLS	LAND USE DESCRIPTION	CAP	RD	LOC ZONE	FRONT	DEPTH	TOT LND UTS	UNIT TYPE	DT	DPTH FACT	% COND	TOT ADJ	UNIT PRICE	ADJ UNIT PRICE	LAND VALUE	OTHER ADJUSTMENTS AND NOTES	YEAR	DENSITY	DECL	FRZ	YR	CONSRV

REVIEW DATE 06/30/2025 BY KWX Total Acres: 10.79 Total Land Value: 0 Market: 0 Agricultural: 0 Common: 0 PRINTED 07/30/2025 BY SYS

LOT 12 & PT OF LOT 15
IN OR 2411/171
EX ESMT OR 262/356 & 602/1016

AMELIA SDC LLC
C/O SAGLO DEVELOPMENT CORP, 290 NW 165TH ST PH-2
MIAMI, FL 33169

2025

00-00-30-0800-0012-0000

NASSAU COUNTY PROPERTY

BUILDING CHARACTERISTICS

ELEMENT	CD	CONSTRUCTION
Exterior Wall	17	CB STUCCO 100
Roof Structur	09	RIDGE FRME 100
Roof Cover	04	BUILT-UP 100
Interior Wall	05	DRYWALL 100
Interior Floo	11	CLAY TILE 70
Interior Floo	03	CONC FINSH 30
Ceiling	01	FIN.SUSPD 100
Air Condition	04	ROOF TOP 100
Heating Type	04	AIR DUCTED 100
Fixtures		26 100
Frame	03	MASONRY 100
Story Height		15 100
RMS		6 100
Stories	1.	1. 100
Units		0 100
BUD8 Adjustme	05	DIST 1A 100
Occupancy	00	NONE 100
Quality	03	Quality Level 03
DOR CODE	1600	COMMUNITY SHOPPING
MAP NUM		MKT AREA 01
NEIGHBORHOOD/LOC	2004.00	

AREA TYPE	TOTAL GROSS AREA	PCT OF BASE	YEAR	TOT ADJ AREA	SUBAREA MARKET VALUE
BAS	1,600	100	1993	1,600	42,762
BAS	3,600	100	1993	3,600	96,214
CAN	845	30	1994	254	6,788
PTO	327	5	1993	16	428
UST	120	40	2001	48	1,283
TOTALS	6,492			5,518	147,474

MARKET ADJUSTMENTS

TYPE	MDL	EFF. AREA	TOT ADJ PTS	EFF. BASE RATE	REPL. COST NEW	AYB	EYB	ECON	FNCT	AP	NORM	% COND
1601	04	5,518	120.3900	133.63	737,370	1978	1978	0	0	30	50.00	20.00

4 COMNTYSHOP – 0% - 0 Heated Area: 5200 HX Base Yr

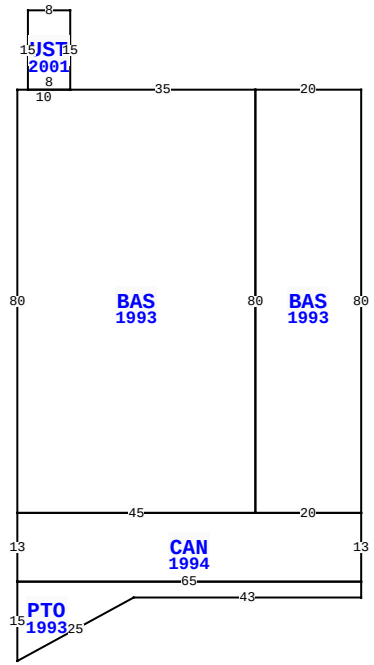

1722 S 8TH ST, FERNANDINA BEACH

BLD DATE	11/14/2024	KW	LGL DATE	
XF DATE	11/14/2024	KW	LAND DATE	04/09/2025 DC
INC DATE			AG DATE	

VALUATION SUMMARY

VALUATION BY	DIRECT_CAP
Tax Group: 2	Tax Dist:
BUILDING MARKET VALUE	3,100,302
TOTAL MARKET OB/XF VALUE	0
TOTAL LAND VALUE - MARKET	0
TOTAL MARKET VALUE	3,100,302
SOH/AGL Deduction	0
ASSESSED VALUE	3,100,302
TOTAL EXEMPTION VALUE	0
BASE TAXABLE VALUE	3,100,302
TOTAL JUST VALUE	3,100,302
NCON VALUE	0
INCOME VALUE	3,100,302
PREVIOUS YEAR MKT VALUE	3,100,302

PERMIT NUM	DESCRIPTION	AMT	ISSUED
20172271	REMODEL	0	07/25/2017
20171930	REMODEL	2,000	06/23/2017
20171972	REMODEL	0	06/22/2017
20171927	REPAIR/RRF	208,000	06/22/2017
20161003	INSTALL SIGN	80	04/12/2016
20120245	REPLACE A/C	6,000	02/13/2012

SALES DATA

OFF RECORD Number	DATE	TYPE INST	Q / U	V / I	RSN CD	SALE PRICE
2411/0171	11/20/2020	SW	Q	I	01	4,100,000
GRANTOR: AMELIA IMPROVEMENTS L						
GRANTEE: AMELIA SDC LLC						
1463/0849	12/05/2006	WD	U	I	09	4,900,000
GRANTOR: EDENS & AVANT FINANCI						
GRANTEE: AMELIA IMPROVEMENTS						

BUILDING NOTES

BUILDING DIMENSIONS

BAS=[YR=1993;LABEL=UNITS:1013:1031;ORIG=-20,0] W35 W10 S80 E45 N80 $
BAS=[YR=1993;LABEL=unit:1059;ORIG=-20,0] E20 S80 W20 N80 $
CAN=[YR=1994;ORIG=-65,80] S13 E65 N13 W20 W45 $
PTO=[YR=1993;ORIG=-65,93] S15 U12R22 E43 N3 W65 $
UST2001=[ORIG=-55,0] N15 W8 S15 E8 $
.

EXTRA FEATURES

L N	OB/XF CODE	DESCRIPTION	BLD	CAP	L	W	UNITS	UT	Adj R	ADJ UNIT PRICE	ORIG COND	YEAR ON	YEAR ACTUAL	Q	% COND	OB/XF MKT VALUE	NOTES

LAND DESCRIPTION

TOTAL OB/XF 0

L N	USE CODE	CLS	LAND USE DESCRIPTION	CAP	R D	LOC ZONE	FRONT	DEPTH	TOT LND UTS	UNIT TYPE	D T	DPTH FACT	% COND	TOT ADJ	UNIT PRICE	ADJ UNIT PRICE	LAND VALUE	OTHER ADJUSTMENTS AND NOTES	YEAR	DENSITY	DECL	FRZ	YR	CONSRV

REVIEW DATE 06/30/2025 BY KWX Total Acres: 10.79 Total Land Value: 0 Market: 0 Agricultural: 0 Common: 0 PRINTED 07/30/2025 BY SYS

LOT 12 & PT OF LOT 15
IN OR 2411/171
EX ESMT OR 262/356 & 602/1016

AMELIA SDC LLC
C/O SAGLO DEVELOPMENT CORP, 290 NW 165TH ST PH-2
MIAMI, FL 33169

2025

00-00-30-0800-0012-0000

NASSAU COUNTY PROPERTY

BUILDING CHARACTERISTICS

ELEMENT	CD	CONSTRUCTION
Exterior Wall	16	WD FR STUC 50
Exterior Wall	17	CB STUCCO 50
Roof Structur	09	RIDGE FRME 100
Roof Cover	04	BUILT-UP 100
Interior Wall	05	DRYWALL 100
Interior Floo	03	CONC FINSH 50
Interior Floo	11	CLAY TILE 50
Ceiling	01	FIN.SUSPD 100
Air Condition	04	ROOF TOP 100
Heating Type	04	AIR DUCTED 100
Fixtures		59 100
Frame	03	MASONRY 100
Story Height		14 100
RMS		39 100
Stories	1.	1. 100
Units		0 100
BUD8 Adjustme	05	DIST 1A 100
Occupancy	00	NONE 100
Quality	03	Quality Level 03
DOR CODE	1600	COMMUNITY SHOPPING
MAP NUM		MKT AREA 01
NEIGHBORHOOD/LOC	2004.00	

AREA TYPE	TOTAL GROSS AREA	PCT OF BASE	YEAR	TOT ADJ AREA	SUBAREA MARKET VALUE
BAS	750	100	1993	750	16,359
BAS	1,104	100	1993	1,104	24,080
BAS	1,400	100	1993	1,400	30,537
BAS	1,656	100	1993	1,656	36,121
BAS	1,890	100	1993	1,890	41,225
BAS	2,400	100	1993	2,400	52,349
BAS	2,410	100	1993	2,410	52,567
BAS	3,200	100	1993	3,200	69,798
BAS	4,220	100	1993	4,220	92,047
BAS	4,260	100	1993	4,260	92,919
TOTALS	28,684			24,633	537,295

MARKET ADJUSTMENTS

TYPE	MDL	EFF. AREA	TOT ADJ PTS	EFF. BASE RATE	REPL. COST NEW	AYB	EYB	ECON	FNCT	AP	NORM	% COND
1601	04	24,633	98.2538	109.06	2,686,475	1987	1987	0	0	30	50.00	20.00

5 COMNTYSHOP – 0% - 0 Heated Area: 23290 HX Base Yr

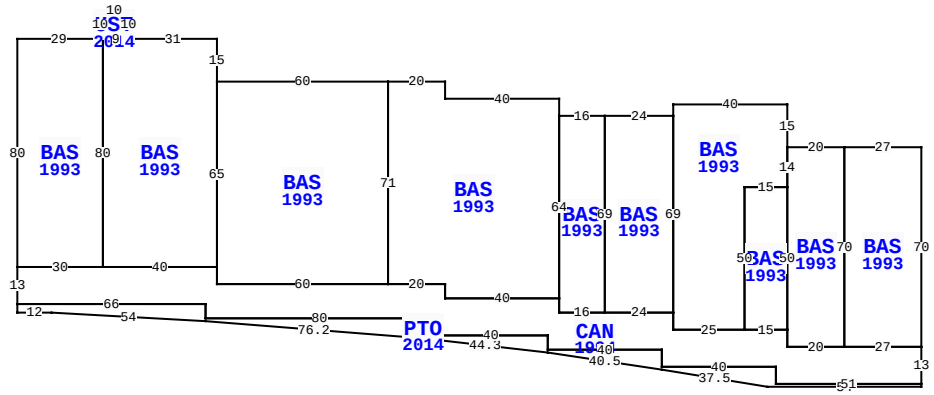

** This building has 13 Sub-Areas

1722 S 8TH ST, FERNANDINA BEACH

BLD DATE	11/14/2024	KW	LGL DATE	
XF DATE	11/14/2024	KW	LAND DATE	04/09/2025 DC
INC DATE			AG DATE	

VALUATION SUMMARY

VALUATION BY	DIRECT_CAP
Tax Group: 2	Tax Dist:
BUILDING MARKET VALUE	3,100,302
TOTAL MARKET OB/XF VALUE	0
TOTAL LAND VALUE - MARKET	0
TOTAL MARKET VALUE	3,100,302
SOH/AGL Deduction	0
ASSESSED VALUE	3,100,302
TOTAL EXEMPTION VALUE	0
BASE TAXABLE VALUE	3,100,302
TOTAL JUST VALUE	3,100,302
NCON VALUE	0
INCOME VALUE	3,100,302
PREVIOUS YEAR MKT VALUE	3,100,302

PERMIT NUM	DESCRIPTION	AMT	ISSUED
20112169	ELEC FOR SIGN	250	12/07/2011
20112170	SIGN	500	12/07/2011
20112138	PODS FOR PIZZA SH	300	11/29/2011
20112139	CONNECT GAS	300	11/29/2011
20112096	GAS CONDUIT FOR P	800	11/21/2011
20112105	FIRE ALARM	2,005	11/21/2011

SALES DATA

OFF RECORD Number	DATE	TYPE INST	Q / U	V / I	RSN CD	SALE PRICE
2411/0171	11/20/2020	SW	Q	I	01	4,100,000
GRANTOR: AMELIA IMPROVEMENTS L						
GRANTEE: AMELIA SDC LLC						
1463/0849	12/05/2006	WD	U	I	09	4,900,000
GRANTOR: EDENS & AVANT FINANCI						
GRANTEE: AMELIA IMPROVEMENTS						

BUILDING NOTES

BUILDING DIMENSIONS

BAS=[YR=1993;LABEL=unit:1211;ORIG=-247,-23] E60 S71 W60 N6 N65 $
BAS=[YR=1993;LABEL=unit:1233;ORIG=-187,-23] E20 S6 E40 S6 S64 W40 N5 W20 N71 $
CAN=[YR=1994;ORIG=-317,42] S13 E66 S5 E80 S6 E40 S5 E40 S6 E40 S6 E51 N13 W27 W20 N6 W15 W25 N6 W24 W16 N5 W40 N5 W20 W60 N6 W40 W30 $
BAS=[YR=1993;LABEL=unit:1147;ORIG=-287,-38] E9 E31 S15 S65 W40 N80 $
BAS=[YR=1993;LABEL=unit:1315;ORIG=-87,-15] E40 S15 S14 W15 S50 W25 N6 N69 N4 $
BAS=[YR=1993;LABEL=unit:1121;ORIG=-317,42] E30 N80 W1 W29 S80

EXTRA FEATURES

LN	OB/XF CODE	DESCRIPTION	BLD	CAP	L	W	UNITS	UT	Adj R	ADJ UNIT PRICE	ORIG COND	YEAR ON	YEAR ACTUAL	Q	% COND	OB/XF MKT VALUE	NOTES

LAND DESCRIPTION

TOTAL OB/XF 0

LN	USE CODE	CLS	LAND USE DESCRIPTION	CAP	RD	LOC ZONE	FRONT	DEPTH	TOT LND UTS	UNIT TYPE	DT	DPTH FACT	% COND	TOT ADJ	UNIT PRICE	ADJ UNIT PRICE	LAND VALUE	OTHER ADJUSTMENTS AND NOTES	YEAR	DENSITY	DECL	FRZ	YR	CONSRV

REVIEW DATE 06/30/2025 BY KWX Total Acres: 10.79 Total Land Value: 0 Market: 0 Agricultural: 0 Common: 0 PRINTED 07/30/2025 BY SYS