LOT 4
AVENIDA AMELIA OR 2539/1598

RODRIGUEZ JAMES A TRUST/RODRIGUEZ JAMES A TRUSTEE
95043 AVENIDA AMELIA WAY
FERNANDINA BEACH, FL 32034

2025

00-00-30-0781-0004-0000

NASSAU COUNTY PROPERTY

BUILDING CHARACTERISTICS

ELEMENT	CD	CONSTRUCTION
Exterior Wall	31	HARDIE BRD 100
Roof Structur	03	GABLE/HIP 100
Roof Cover	03	COMP SHNGL 100
Interior Wall	05	DRYWALL 100
Interior Floo	11	CLAY TILE 70
Interior Floo	14	CARPET 30
Air Condition	03	CENTRAL 100
Heating Type	04	AIR DUCTED 100
Bedrooms		4 100
Bathrooms		3.5 100
Frame	02	WOOD FRAME 100
Quality	03	Quality Level 03

DOR CODE	0100	SINGLE FAMILY	
MAP NUM		MKT AREA	03
NEIGHBORHOOD/LOC	3051.00		

AREA TYPE	TOTAL GROSS AREA	PCT OF BASE	YEAR	TOT ADJ AREA	SUBAREA MARKET VALUE
BAS	2,316	100	2024	2,316	603,779
FGR	669	55	2024	368	95,938
FOP	51	30	2024	15	3,910
FOP	382	30	2024	115	29,980
FUS	1,192	100	2024	1,192	310,754
STR	44	10	2024	4	1,043
TOTALS	4,654			4,010	1,045,403

MARKET ADJUSTMENTS

TYPE	MDL	EFF. AREA	TOT ADJ PTS	EFF. BASE RATE	REPL. COST NEW	AYB	EYB	ECON	FNCT		NORM	% COND
0500	12	4,010	173.6856	274.42	1,100,424	2023	2023	5	0	0	0.00	95.00

1 SFR CUST – 0% - 2025 Heated Area: 3508 HX Base Yr

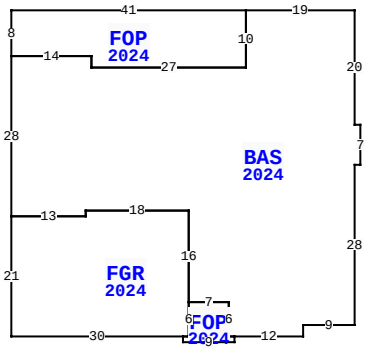

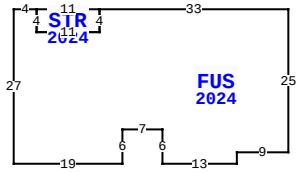

95043 AVENIDA AMELIA WAY, FERNANDINA BEACH

BLD DATE		LGL DATE	
XF DATE		LAND DATE	03/14/2024 MLU
INC DATE		AG DATE	

NASSAU COUNTY PROPERTY — VALUATION SUMMARY

VALUATION BY	STANDARD
Tax Group: 8	Tax Dist:
BUILDING MARKET VALUE	1,045,403
TOTAL MARKET OB/XF VALUE	67,950
TOTAL LAND VALUE - MARKET	450,000
TOTAL MARKET VALUE	1,563,353
SOH/AGL Deduction	0
ASSESSED VALUE	1,563,353
TOTAL EXEMPTION VALUE	0
BASE TAXABLE VALUE	1,563,353
TOTAL JUST VALUE	1,563,353
NCON VALUE	52,750
INCOME VALUE	
PREVIOUS YEAR MKT VALUE	1,231,721

PERMIT NUM	DESCRIPTION	AMT	ISSUED
SP240004252	NEW INGROUND SWIM	86,734	04/15/2024
230000835	4587T 3477H 678G	636,892	01/30/2023
220010755			

SALES DATA

OFF RECORD Number	DATE	TYPE INST	Q / U	V / I	RSN CD	SALE PRICE
2697/1196	2/29/2024	SW	Q	I	01	1,565,900

GRANTOR: SCOTT ROAD PARTNERS L
GRANTEE: RODRIGUEZ JAMES A T

EXTRA FEATURES

LN	OB/XF CODE	DESCRIPTION	BLD	CAP	L	W	UNITS	UT	Adj R	ADJ UNIT PRICE	ORIG COND	YEAR ON	YEAR ACTUAL	Q	% COND	OB/XF MKT VALUE	NOTES
1	0501	FP-AVERAGE	1	0	0	0	1.00	UT	5,000.00	5,000.00	100	2024	2023		100	5,000	
2	0855	CONC PAVER	1	0	0	0	1,020.00	SF	10.00	10.00	100	2024	2023		100	10,200	
3	0912	SCRN RM G	0	0	0	0	1,050.00	SF	20.00	20.00	100	2025	2024		100	21,000	
4	0861	POOL GUNIT	0	0	0	0	350.00	SF	85.00	85.00	100	2025	2024		100	29,750	
5	5001	SUB STATN	0	0	0	0	700.00	UT	0.00	0.00	100	2025	2024		100	0	
6	0871	POOL HTR R	0	0	0	0	1.00	UT	2,000.00	2,000.00	100	2025	2024		100	2,000	

BUILDING NOTES

BUILDING DIMENSIONS

BAS=[YR=2024;ORIG=40,20] E14 S2 E27 N10 E19 S20 E1 S7 W1 S28 W9 S2 W12 W1 N6 W7 N16 W18 S1 W13 N28 $
FGR=[YR=2024;ORIG=40,48] S21 E30 E1 N6 N16 W18 S1 W13 $
FOP=[YR=2024;ORIG=71,63] S6 W1 S1 E9 N1 W1 N6 W7 $
FOP=[YR=2024;ORIG=40,20] N8 E41 S10 W27 N2 W14 $
FUS=[YR=2024;ORIG=150,50] N27 E4 S4 E11 N4 E33 S25 W9 S2 W13 N6 W7 S6 W19 $
STR=[YR=2024;ORIG=154,23] E11 S4 W11 N4 $
.

LAND DESCRIPTION

TOTAL OB/XF 67,950

LN	USE CODE	CLS	LAND USE DESCRIPTION	CAP	RD	LOC ZONE	FRONT	DEPTH	TOT LND UTS	UNIT TYPE	DT	DPTH FACT	% COND	TOT ADJ	UNIT PRICE	ADJ UNIT PRICE	LAND VALUE	OTHER ADJUSTMENTS AND NOTES	YEAR	DENSITY	DECL	FRZ	YR	CONSRV
1	000100	C	RES	0		RSF-1	0.00	0.00	1.00	LT		1.00	1.00	1.00	450,000.00	450,000.00	450,000							

REVIEW DATE 08/21/2024 BY DJ Total Acres: 0.00 Total Land Value: 450,000 Market: 0 Agricultural: 0 Common: 450,000 PRINTED 07/30/2025 BY SYS