LOT 3
AVENIDA AMELIA OR 2539/1598

MAGLIOCCHETTI PAUL JOSEPH/KINGERY REBECCA MAE
95035 AVENIDA AMELIA WAY
FERNANDINA BEACH, FL 32034

2025

00-00-30-0781-0003-0000

NASSAU COUNTY PROPERTY

BUILDING CHARACTERISTICS

ELEMENT	CD	CONSTRUCTION
Exterior Wall	31	HARDIE BRD 100
Roof Structur	03	GABLE/HIP 100
Roof Cover	03	COMP SHNGL 100
Interior Wall	05	DRYWALL 100
Interior Floo	11	CLAY TILE 50
Interior Floo	13	LVT/LAMNT 50
Air Condition	03	CENTRAL 100
Heating Type	04	AIR DUCTED 100
Bedrooms		3 100
Bathrooms		3.5 100
Frame	02	WOOD FRAME 100
Stories	2.	2. 100
Units		0 100
Occupancy	00	NONE 100
Quality	03	Quality Level 03

DOR CODE 0100 SINGLE FAMILY
MAP NUM | MKT AREA 03
NEIGHBORHOOD/LOC 3051.00

AREA TYPE	TOTAL GROSS AREA	PCT OF BASE	YEAR	TOT ADJ AREA	SUBAREA MARKET VALUE
BAS	2,432	100	2025	2,432	658,196
FGR	636	55	2025	350	94,724
FOP	163	30	2025	49	13,261
FUS	1,164	100	2025	1,164	315,025
PTO	720	5	2025	36	9,743
STR	104	10	2025	10	2,706
TOTALS	5,219			4,041	1,093,656

MARKET ADJUSTMENTS

TYPE	MDL	EFF. AREA	TOT ADJ PTS	EFF. BASE RATE	REPL. COST NEW	AYB	EYB	ECON	FNCT		NORM	% COND
0500	12	4,041	171.2920	270.64	1,093,656	2024	2024	0	0	0	0.00	100.00

1 SFR CUST – 0% - 2025 Heated Area: 3596 HX Base Yr

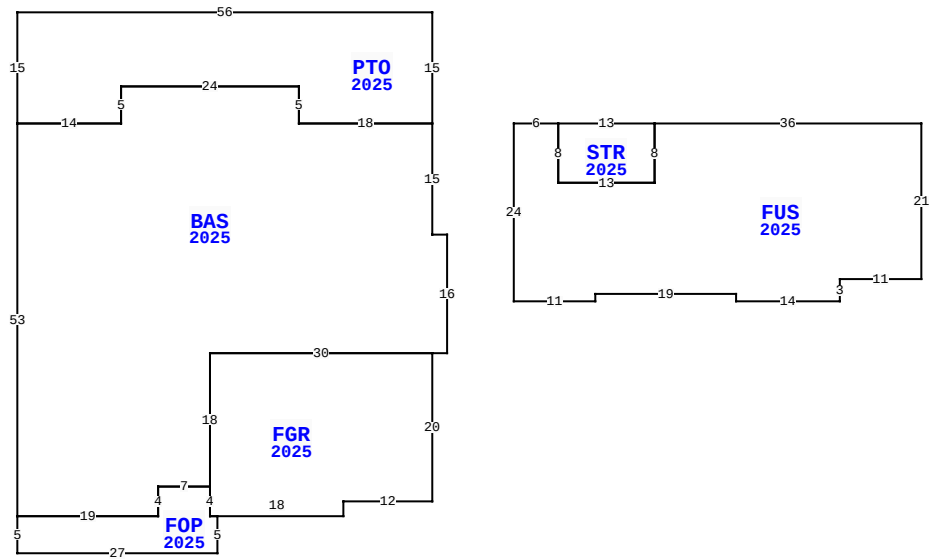

95035 AVENIDA AMELIA WAY, FERNANDINA BEACH

BLD DATE		LGL DATE	
XF DATE		LAND DATE	03/14/2024 MLU
INC DATE		AG DATE	

NASSAU COUNTY PROPERTY — VALUATION SUMMARY

VALUATION BY	STANDARD
Tax Group: 8	Tax Dist:
BUILDING MARKET VALUE	1,093,656
TOTAL MARKET OB/XF VALUE	44,619
TOTAL LAND VALUE - MARKET	450,000
TOTAL MARKET VALUE	1,588,275
SOH/AGL Deduction	0
ASSESSED VALUE	1,588,275
TOTAL EXEMPTION VALUE	0
BASE TAXABLE VALUE	1,588,275
TOTAL JUST VALUE	1,588,275
NCON VALUE	1,138,275
INCOME VALUE	
PREVIOUS YEAR MKT VALUE	350,000

PERMIT NUM	DESCRIPTION	AMT	ISSUED
CO240006938	PRIVATE PROVIDER	638,936	06/12/2024
B240000325	SCREEN ENCLOSURE	20,255	01/10/2024
B230007462	T-4273, H-3236, G	597,418	06/09/2023

SALES DATA

OFF RECORD Number	DATE	TYPE INST	Q / U	V / I	RSN CD	SALE PRICE
2719/1252	6/14/2024	SW	Q	I	01	1,654,900

GRANTOR: SCOTT ROAD PARTNERS L
GRANTEE: MAGLIOCCHETTI PAUL

BUILDING NOTES

EXTRA FEATURES

LN	OB/XF CODE	DESCRIPTION	BLD	CAP	L	W	UNITS	UT	Adj R	ADJ UNIT PRICE	ORIG COND	YEAR ON	YEAR ACTUAL	Q	% COND	OB/XF MKT VALUE	NOTES
1	0502	FP-CUSTOM	0	0	0	0	1.00	UT	10,000.00	10,000.00	100	2025	2024		100	10,000	
2	0855	CONC PAVER	0	0	0	0	1,180.00	SF	10.00	10.00	100	2025	2024		100	11,800	
3	0912	SCRN RM G	0	0	0	0	750.00	SF	20.00	20.00	100	2025	2024		100	15,000	
4	0855	CONC PAVER	0	0	0	0	340.00	SF	10.00	10.00	100	2025	2024		100	3,400	
5	1134	LANDSCP BL	0	0	0	0	121.00	SF	3.00	3.00	100	2025	2024		100	363	
6	0476	VF 6 SBPL	0	0	0	0	108.00	LF	32.00	32.00	100	2025	2024		100	3,456	
7	0470	VNYL GATE	0	0	0	0	2.00	UT	300.00	300.00	100	2025	2024		100	600	

BUILDING DIMENSIONS

BAS=[YR=2025;ORIG=0,-5] W18 N5 W24 S5 W14 S53 E19 N4 E7 N18 E30 E2 N16 W2 N15 $
FUS=[YR=2025;ORIG=11,-5] E6 S8 E13 N8 E36 S21 W11 S3 W14 N1 W19 S1 W11 N24 $
PTO=[YR=2025;ORIG=0,-5] W18 N5 W24 S5 W14 N15 E56 S15 $
FGR=[YR=2025;ORIG=0,26] W30 S18 S4 E18 N2 E12 N20 $
FOP=[YR=2025;ORIG=-29,48] S5 W27 N5 E19 N4 E7 S4 E1 $
STR=[YR=2025;ORIG=17,-5] E13 S8 W13 N8 $
.

LAND DESCRIPTION

TOTAL OB/XF 44,619

LN	USE CODE	CLS	LAND USE DESCRIPTION	CAP	RD	LOC ZONE	FRONT	DEPTH	TOT LND UTS	UNIT TYPE	DT	DPTH FACT	% COND	TOT ADJ	UNIT PRICE	ADJ UNIT PRICE	LAND VALUE	OTHER ADJUSTMENTS AND NOTES	YEAR	DENSITY	DECL	FRZ	YR	CONSRV
1	000100	C	RES	0		RSF-1	0.00	0.00	1.00	LT		1.00	1.00	1.00	450,000.00	450,000.00	450,000							

REVIEW DATE 07/03/2024 BY DJ Total Acres: 0.00 Total Land Value: 450,000 Market: 0 Agricultural: 0 Common: 450,000 PRINTED 07/30/2025 BY SYS