PT OF LOT 14 IN OR 2739/56 &
UTIL & WELL ESMT IN
OR 1937/1712

PRYHARSKI PETER DANIEL & AMY UPHAM
5000 ANTHONY ST
FERNANDINA BEACH, FL 32034

2025

00-00-30-0780-0014-0120

BUILDING CHARACTERISTICS

ELEMENT	CD	CONSTRUCTION
Exterior Wall	10	ABOVE AVG 100
Roof Structur	08	IRREGULAR 100
Roof Cover	12	MODULAR MT 100
Interior Wall	05	DRYWALL 100
Interior Floo	12	HARDWOOD 60
Interior Floo	14	CARPET 40
Air Condition	03	CENTRAL 100
Heating Type	04	AIR DUCTED 100
Bedrooms		4 100
Bathrooms		2.5 100
Frame	02	WOOD FRAME 100
Stories	1.	1. 100
Units		0 100
Occupancy	00	NONE 100
Quality	05	Quality Level 05
DOR CODE	0100	SINGLE FAMILY
MAP NUM		MKT AREA 03
NEIGHBORHOOD/LOC	3047.00	

AREA TYPE	TOTAL GROSS AREA	PCT OF BASE	YEAR	TOT ADJ AREA	SUBAREA MARKET VALUE
BAS	2,404	100	2016	2,404	534,194
FGR	698	55	2016	384	85,329
FOP	189	30	2016	57	12,666
FOP	374	30	2016	112	24,887
TOTALS	3,665			2,957	657,076

MARKET ADJUSTMENTS

TYPE	MDL	EFF. AREA	TOT ADJ PTS	EFF. BASE RATE	REPL. COST NEW	AYB	EYB	ECON	FNCT		NORM	% COND
0500	11	2,957	145.7376	230.27	680,908	2016	2016	0	0	0	3.50	96.50

1 SFR CUST – 100% - 2025 Heated Area: 2404 HX Base Yr 2025

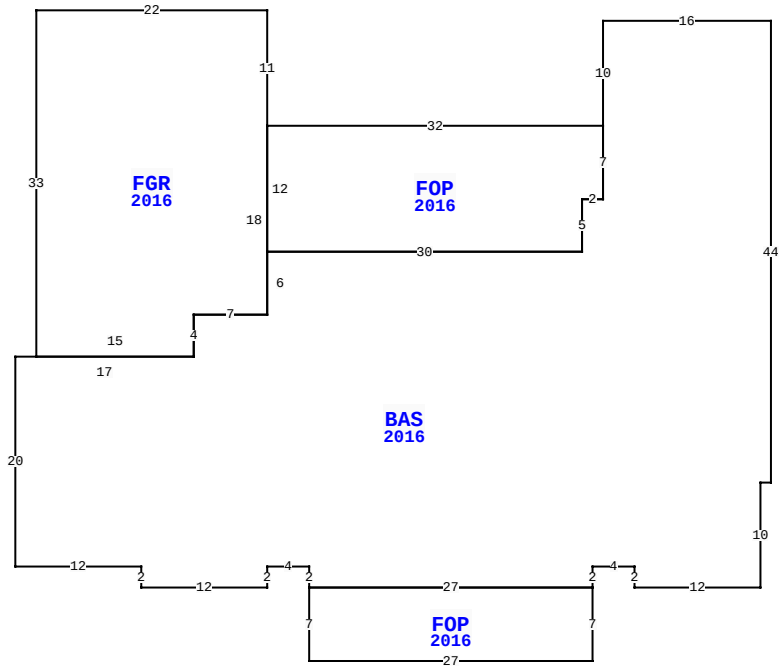

5000 ANTHONY ST, FERNANDINA BEACH

BLD DATE		LGL DATE	
XF DATE		LAND DATE	
INC DATE		AG DATE	

NASSAU COUNTY PROPERTY

PAGE 1 of 1 8

VALUATION SUMMARY

VALUATION BY		STANDARD
Tax Group: 8	Tax Dist:	
BUILDING MARKET VALUE		657,076
TOTAL MARKET OB/XF VALUE		36,009
TOTAL LAND VALUE - MARKET		450,000
TOTAL MARKET VALUE		1,143,085
SOH/AGL Deduction		0
ASSESSED VALUE		1,143,085
TOTAL EXEMPTION VALUE	HX HB	50,722
BASE TAXABLE VALUE		1,092,363
TOTAL JUST VALUE		1,143,085
NCON VALUE		0
INCOME VALUE		
PREVIOUS YEAR MKT VALUE		748,240

PERMIT NUM	DESCRIPTION	AMT	ISSUED
1630458	CO ISSUED	0	06/16/2016
B1631956	SWIM POOL	18,000	03/22/2016
B1530458	NEW CONSTR	307,071	05/01/2015

SALES DATA

OFF RECORD Number	DATE	TYPE INST	Q / U	V / I	RSN CD	SALE PRICE
2739/56	9/18/2024	WD	Q	I	01	1,445,000
GRANTOR: DUREL THOMAS JAMES &						
GRANTEE: PRYHARSKI PETER DAN						
1937/1712	9/16/2014	MS	U	I	31	5,800
GRANTOR: GREENE ROBERT E III &						
GRANTEE: DUREL THOMES JAMES						

BUILDING NOTES

BUILDING DIMENSIONS

BAS=[YR=2016] W16 S10 FOP=[YR=2016] W32 FGR=[YR=2016] N11 W22 S33 E15 N4 E7 N18$ S12 E30 N5 E2 N7$ S7 W2 S5 W30 S6 W7 S4 W17 S20 E12 S2 E12 N2 E4 S2 FOP=[YR=2016] S7 E27 N7 W27$ E27 N2 E4 S2 E12 N10 E1 N44$.

EXTRA FEATURES

LN	OB/XF CODE	DESCRIPTION	BLD	CAP	L	W	UNITS	UT	Adj R	ADJ UNIT PRICE	ORIG COND	YEAR ON	YEAR ACTUAL	Q	% COND	OB/XF MKT VALUE	NOTES
1	0810	CONCRETE A	0	100	27	26	702.00	SF	6.50	6.50	100	2016	2016	3	95	4,335	
2	0861	POOL GUNIT	0	100	0	0	192.00	SF	85.00	85.00	100	2016	2016	3	78	12,730	
3	0911	SCRN RM A	0	100	0	0	732.00	SF	17.50	17.50	100	2016	2016	3	70	8,967	
4	0845	KOOL DECK	0	100	0	0	540.00	SF	7.25	7.25	100	2016	2016	3	95	3,719	
5	0871	POOL HTR R	0	100	0	0	1.00	UT	2,000.00	2,000.00	100	2016	2016	3	70	1,400	
6	0476	VF 6 SBPL	0	100	0	0	42.00	LF	32.00	32.00	100	2016	2016	3	89	1,196	
7	0470	VNYL GATE	0	100	0	0	1.00	UT	300.00	300.00	100	2016	2016	3	89	267	
8	0500	FP-PRE FAB	0	100	0	0	1.00	UT	3,500.00	3,500.00	100	2016	2016	3	97	3,395	

LAND DESCRIPTION

TOTAL OB/XF 36,009

LN	USE CODE	CLS	LAND USE DESCRIPTION	CAP	RD	LOC ZONE	FRONT	DEPTH	TOT LND UTS	UNIT TYPE	DT	DPTH FACT	% COND	TOT ADJ	UNIT PRICE	ADJ UNIT PRICE	LAND VALUE	OTHER ADJUSTMENTS AND NOTES	YEAR	DENSITY	DECL	FRZ	YR	CONSRV
1	000100	C	RES	100		RSF-1	0.00	0.00	1.00	LT		1.00	1.00	1.50	300,000.00	450,000.00	450,000							

REVIEW DATE 02/26/2024 BY KBA Total Acres: 0.00 Total Land Value: 450,000 Market: 0 Agricultural: 0 Common: 450,000 PRINTED 07/30/2025 BY SYS