LOT 6
IN OR 2737/486
(EX PT OR 2201/1671)

LYONS REVOCABLE LIVING TRUST/LYONS MARK RANDALL TR
1292 QUATTLEFIELD LN
FERNANDINA BCH, FL 32034

2025

00-00-30-0761-0006-0000

NASSAU COUNTY PROPERTY

BUILDING CHARACTERISTICS

ELEMENT	CD	CONSTRUCTION
Exterior Wall	16	WD FR STUC 80
Exterior Wall	12	CEDAR 20
Roof Structur	08	IRREGULAR 100
Roof Cover	03	COMP SHNGL 100
Interior Wall	05	DRYWALL 100
Interior Floo	11	CLAY TILE 70
Interior Floo	14	CARPET 30
Air Condition	03	CENTRAL 100
Heating Type	04	AIR DUCTED 100
Bedrooms		5 100
Bathrooms		4 100
Frame	02	WOOD FRAME 100
Stories	1.5	1.5 100
Units		0 100
Occupancy	00	NONE 100
Quality	06	Quality Level 06
DOR CODE	0100	SINGLE FAMILY
MAP NUM		MKT AREA 03
NEIGHBORHOOD/LOC	3050.00	

AREA TYPE	TOTAL GROSS AREA	PCT OF BASE	YEAR	TOT ADJ AREA	SUBAREA MARKET VALUE
BAS	2,683	100	2019	2,683	520,622
FGR	940	55	2019	517	100,321
FOP	207	30	2019	62	12,031
FOP	407	30	2019	122	23,673
FUS	423	100	2019	423	82,080
STR	36	10	2019	4	776
TOTALS	4,696			3,811	739,503

MARKET ADJUSTMENTS

TYPE	MDL	EFF. AREA	TOT ADJ PTS	EFF. BASE RATE	REPL. COST NEW	AYB	EYB	ECON	FNCT		NORM	% COND
0500	01	3,811	125.9595	199.02	758,465	2019	2019	0	0	0	2.50	97.50

1 SFR CUST – 100% - 2022 Heated Area: 3106 HX Base Yr 2022

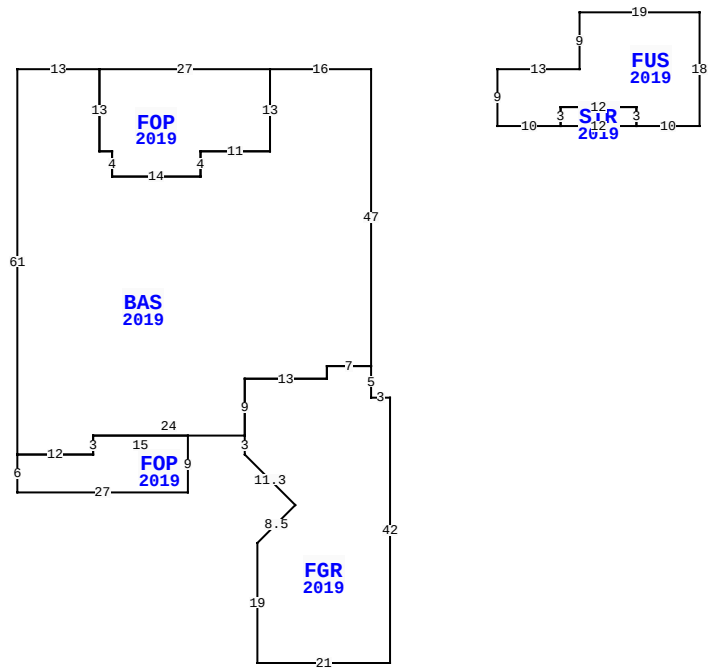

1292 QUATTLEFIELD LN, FERNANDINA BEACH

BLD DATE		LGL DATE	
XF DATE		LAND DATE	04/11/2024 MLU
INC DATE		AG DATE	

VALUATION SUMMARY

VALUATION BY		STANDARD
Tax Group: 8	Tax Dist:	
BUILDING MARKET VALUE		739,503
TOTAL MARKET OB/XF VALUE		84,644
TOTAL LAND VALUE - MARKET		450,000
TOTAL MARKET VALUE		1,274,147
SOH/AGL Deduction		366,541
ASSESSED VALUE		907,606
TOTAL EXEMPTION VALUE	HX HB VX	55,722
BASE TAXABLE VALUE		851,884
TOTAL JUST VALUE		1,274,147
NCON VALUE		0
INCOME VALUE		
PREVIOUS YEAR MKT VALUE		1,242,580

PERMIT NUM	DESCRIPTION	AMT	ISSUED
20006278	ADDITION	0	09/01/2020
20002458	SWIM POOL	400,000	03/09/2020
B1902028	NEW CONSTR	435,271	02/28/2019

SALES DATA

OFF RECORD Number	DATE	TYPE INST	Q U /	V I /	RSN CD	SALE PRICE
2737/486	9/05/2024	SW	U	I	11	100
GRANTOR: LYONS MARK						
GRANTEE: LYONS REVOCABLE LIV						
2374/1097	6/10/2020	SW	U	I	11	100
GRANTOR: W.R. HOWELL COMPANY I						
GRANTEE: LYONS MARK & HOLLY						

BUILDING NOTES

BUILDING DIMENSIONS

BAS=[YR=2019] W16 FOP=[YR=2019] W27 S13 E2 S4 E14 N4 E11 N13$ S13 W11 S4 W14 N4 W2 N13 W13 S61 FOP=[YR=2019] S6 E27 N9 W15 S3 W12$ E12 N3 E24 FGR=[YR=2019] S3 D8 R8 D6 L6 S19 E21 N42 W3 N5 W7 S2 W13 S9$ N9 E13 N2 E7 N47$ PTR=E20 FUS=[YR=2019] S9 E10 STR=[YR=2019] E12 N3 W12 S3$ N3 E12 S3 E10 N18 W19 S9 W13$ W20$.

EXTRA FEATURES

LN	OB/XF CODE	DESCRIPTION	BLD	CAP	L	W	UNITS	UT	Adj R	ADJ UNIT PRICE	ORIG COND	YEAR ON	YEAR ACTUAL	Q	% COND	OB/XF MKT VALUE	NOTES
1	0855	CONC PAVER	0	100	0	0	2,036.00	SF	10.00	10.00	100	2019	2019	3	97	19,749	
2	0600	SUMMER KIT	0	100	0	0	1.00	UT	5,000.00	5,000.00	100	2019	2019	3	82	4,100	
3	0500	FP-PRE FAB	0	100	0	0	2.00	UT	3,500.00	3,500.00	100	2019	2019	3	98	6,860	
4	0861	POOL GUNIT	0	100	0	0	442.00	SF	85.00	85.00	100	2020	2020	3	90	33,813	
5	0855	CONC PAVER	0	100	0	0	704.00	SF	10.00	10.00	100	2020	2020	3	98	6,899	
6	0910	SCRN RM L	0	100	0	0	1,025.00	SF	15.00	15.00	100	2020	2020	3	86	13,223	

LAND DESCRIPTION

TOTAL OB/XF 84,644

LN	USE CODE	CLS	LAND USE DESCRIPTION	CAP	RD	LOC ZONE	FRONT	DEPTH	TOT LND UTS	UNIT TYPE	DT	DPTH FACT	% COND	TOT ADJ	UNIT PRICE	ADJ UNIT PRICE	LAND VALUE	OTHER ADJUSTMENTS AND NOTES	YEAR	DENSITY	DECL	FRZ	YR	CONSRV
1	000100	C	RES	100		RSF-1	0.00	0.00	1.00	LT		1.00	1.00	1.00	450,000.00	450,000.00	450,000							

REVIEW DATE 03/31/2021 BY RK Total Acres: 0.00 Total Land Value: 450,000 Market: 0 Agricultural: 0 Common: 450,000 PRINTED 07/30/2025 BY SYS