PT OF LOT 5
IN OR 2112/1216
SUB OF SO PT SEC 12 DB 39/292

TILTON OLIVER F & LORI Y
1333 MANUCY RD
FERNANDINA BEACH, FL 32034

2025

00-00-30-0760-0005-0170

NASSAU COUNTY PROPERTY

BUILDING CHARACTERISTICS

ELEMENT	CD	CONSTRUCTION
Exterior Wall	12	CEDAR 100
Roof Structur	03	GABLE/HIP 100
Roof Cover	03	COMP SHNGL 100
Interior Wall	05	DRYWALL 100
Interior Floo	11	CLAY TILE 70
Interior Floo	14	CARPET 30
Air Condition	03	CENTRAL 100
Heating Type	04	AIR DUCTED 100
Bedrooms		4 100
Bathrooms		3.5 100
Frame	02	WOOD FRAME 100
Stories	2.	2. 100
Units		0 100
Occupancy	00	NONE 100
Quality	05	Quality Level 05

DOR CODE	0100	SINGLE FAMILY	
MAP NUM		MKT AREA	03
NEIGHBORHOOD/LOC	3027.00		

AREA TYPE	TOTAL GROSS AREA	PCT OF BASE	YEAR	TOT ADJ AREA	SUBAREA MARKET VALUE
BAS	999	100	1993	999	119,973
BAS	571	100	2012	571	68,574
FOP	72	30	1993	22	2,642
FUS	817	100	1993	817	98,116
STP	36	10	1993	4	481
UOP	50	20	1993	10	1,201
TOTALS	2,545			2,423	290,986

MARKET ADJUSTMENTS

TYPE	MDL	EFF. AREA	TOT ADJ PTS	EFF. BASE RATE	REPL. COST NEW	AYB	EYB	ECON	FNCT		NORM	% COND
0100	01	2,423	132.7018	132.70	321,532	1989	2005	0	0	0	9.50	90.50

1 SINGLE FAM – 100% - 2019 Heated Area: 2387 HX Base Yr 2019

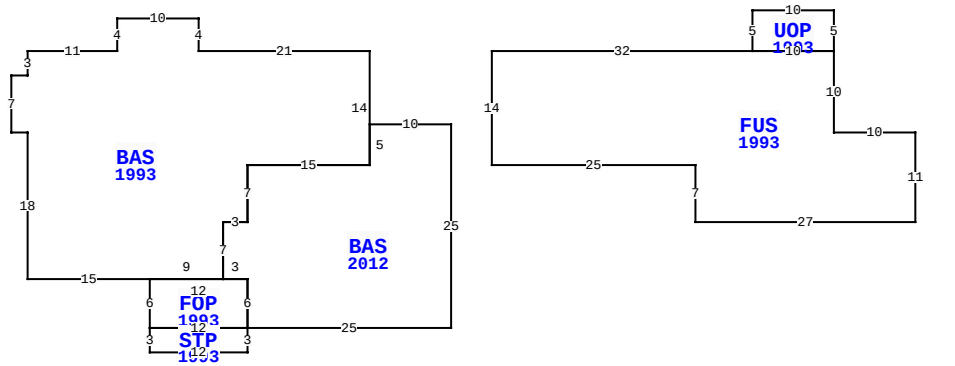

1333 MANUCY RD, FERNANDINA BEACH

BLD DATE		LGL DATE	
XF DATE		LAND DATE	03/26/2024 MLU
INC DATE		AG DATE	

VALUATION SUMMARY

VALUATION BY		STANDARD
Tax Group: 8	Tax Dist:	
BUILDING MARKET VALUE		290,986
TOTAL MARKET OB/XF VALUE		6,367
TOTAL LAND VALUE - MARKET		300,000
TOTAL MARKET VALUE		597,353
SOH/AGL Deduction		253,312
ASSESSED VALUE		344,041
TOTAL EXEMPTION VALUE	HX HB	50,722
BASE TAXABLE VALUE		293,319
TOTAL JUST VALUE		597,353
NCON VALUE		0
INCOME VALUE		
PREVIOUS YEAR MKT VALUE		584,531

PERMIT NUM	DESCRIPTION	AMT	ISSUED
R1213046	ROOF	2,625	08/01/2012
B25628	REMODEL	30,845	03/01/2012
2869	H/AC	2,800	01/04/1989
5611	NEW CONSTR	3,675	01/04/1989
3341	NEW CONSTR	0	12/28/1988
5337	NEW CONSTR	72,725	12/01/1988

SALES DATA

OFF RECORD Number	DATE	TYPE INST	Q U	V I	RSN CD	SALE PRICE
2112/1216	4/07/2017	WD	Q	I	01	378,500
GRANTOR: ATKINS ROBIN L N/K/A						
GRANTEE: TILTON OLIVER F & L						
0661/0411	6/11/1992	WD	Q	I		129,000
GRANTOR: RUSSELL KIMBERLY M						
GRANTEE: ATKINS T L & ROBIN						

BUILDING NOTES

BUILDING DIMENSIONS

BAS=[YR=1993] W21 N4 W10 S4 W11 S3 W2 S7 E2 S18 E15
FOP=[YR=1993] S6 STP=[YR=1993] S3 E12 N3 W12$ E12
BAS=[YR=2012] E25 N25 W10 S5 W15 S7 W3 S7 E3 S6 $ N6 W12 $ E9
N7 E3 N7 E15 N14$ PTR= E15 FUS=[YR=1993] E32 UOP=[YR=1993] N5
E10 S5 W10 $ E10 S10 E10 S11 W27 N7 W25 N14 $ W15 $.

EXTRA FEATURES

LN	OB/XF CODE	DESCRIPTION	BLD	CAP	L	W	UNITS	UT	Adj R	ADJ UNIT PRICE	ORIG COND	YEAR ON	YEAR ACTUAL	Q	% COND	OB/XF MKT VALUE	NOTES
1	0504	FP-ELECTRI	0	100	0	0	1.00	UT	2,000.00	2,000.00	100	1989	1989	3	64	1,280	
2	0811	CONCRETE B	0	100	0	0	936.00	SF	5.20	5.20	100	1989	1989	3	54.5	2,653	
3	0858	SCULP CONC	0	100	0	0	208.00	SF	13.00	13.00	100	1995	1995	3	90	2,434	

LAND DESCRIPTION

TOTAL OB/XF 6,367

LN	USE CODE	CLS	LAND USE DESCRIPTION	CAP	RD	LOC ZONE	FRONT	DEPTH	TOT LND UTS	UNIT TYPE	DT	DPTH FACT	% COND	TOT ADJ	UNIT PRICE	ADJ UNIT PRICE	LAND VALUE	OTHER ADJUSTMENTS AND NOTES	YEAR	DENSITY	DECL	FRZ	YR	CONSRV
1	000100	C	RES	100		RSF-	1109.00	210.00	1.00	UT		1.00	1.00	1.00	300,000.00	300,000.00	300,000							

REVIEW DATE 01/31/2024 BY KBA Total Acres: 0.00 Total Land Value: 300,000 Market: 0 Agricultural: 0 Common: 300,000 PRINTED 07/30/2025 BY SYS