PT OF LOT 4 (EX S-6)
IN OR 2298/468
SUB OF SO PT SEC 12 DB 39/292

GENOVESE JOHN T & JENNIFER V
1292 MANUCY RD
FERNANDINA BEACH, FL 32034

**2025**

**00-00-30-0760-0004-0050**

## NASSAU COUNTY PROPERTY



## BUILDING CHARACTERISTICS

| ELEMENT | CD | CONSTRUCTION |
|---|---|---|
| Exterior Wall | 10 | ABOVE AVG 100 |
| Roof Structur | 03 | GABLE/HIP 100 |
| Roof Cover | 03 | COMP SHNGL 100 |
| Interior Wall | 05 | DRYWALL 100 |
| Interior Floo | 12 | HARDWOOD 60 |
| Interior Floo | 14 | CARPET 40 |
| Air Condition | 03 | CENTRAL 100 |
| Heating Type | 04 | AIR DUCTED 100 |
| Bedrooms | | 5 100 |
| Bathrooms | | 4 100 |
| Frame | 02 | WOOD FRAME 100 |
| Stories | 1.5 | 1.5 100 |
| Units | | 0 100 |
| Occupancy | 00 | NONE 100 |
| Quality | 04 | Quality Level 04 |

| | | | |
|---|---|---|---|
| DOR CODE | 0100 | SINGLE FAMILY | |
| MAP NUM | | MKT AREA | 03 |
| NEIGHBORHOOD/LOC | 3027.00 | | |

| AREA TYPE | TOTAL GROSS AREA | PCT OF BASE | YEAR | TOT ADJ AREA | SUBAREA MARKET VALUE |
|---|---|---|---|---|---|
| BAS | 1,908 | 100 | 2020 | 1,908 | 324,137 |
| FGR | 512 | 55 | 2020 | 282 | 47,907 |
| FOP | 340 | 30 | 2020 | 102 | 17,328 |
| FSP | 340 | 40 | 2020 | 136 | 23,104 |
| FST | 20 | 55 | 2020 | 11 | 1,869 |
| FUS | 1,007 | 100 | 2020 | 1,007 | 171,072 |
| STR | 145 | 10 | 2020 | 14 | 2,379 |
| TOTALS | 4,272 | | | 3,460 | 587,795 |

## MARKET ADJUSTMENTS

| TYPE | MDL | EFF. AREA | TOT ADJ PTS | EFF. BASE RATE | REPL. COST NEW | AYB | EYB | ECON | FNCT | | NORM | % COND |
|---|---|---|---|---|---|---|---|---|---|---|---|---|
| 0500 | 01 | 3,460 | 109.1580 | 172.47 | 596,746 | 2020 | 2020 | 0 | 0 | 0 | 1.50 | 98.50 |

1 SFR CUST – 100% - 2021 Heated Area: 2915 HX Base Yr 2021

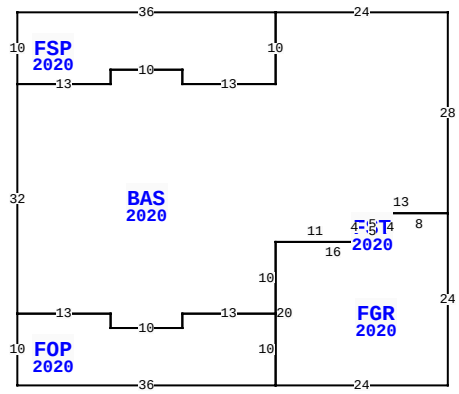


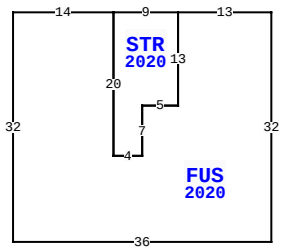


1292 MANUCY RD, FERNANDINA BEACH

| | | | |
|---|---|---|---|
| BLD DATE | | LGL DATE | |
| XF DATE | | LAND DATE | 03/26/2024 MLU |
| INC DATE | | AG DATE | |

## VALUATION SUMMARY

| | | |
|---|---|---|
| VALUATION BY | | STANDARD |
| Tax Group: 8 | Tax Dist: | |
| BUILDING MARKET VALUE | | 587,795 |
| TOTAL MARKET OB/XF VALUE | | 10,340 |
| TOTAL LAND VALUE - MARKET | | 300,000 |
| TOTAL MARKET VALUE | | 898,135 |
| SOH/AGL Deduction | | 214,174 |
| ASSESSED VALUE | | 683,961 |
| TOTAL EXEMPTION VALUE | HX HB | 50,722 |
| BASE TAXABLE VALUE | | 633,239 |
| TOTAL JUST VALUE | | 898,135 |
| NCON VALUE | | 0 |
| INCOME VALUE | | |
| PREVIOUS YEAR MKT VALUE | | 871,285 |

| PERMIT NUM | DESCRIPTION | AMT | ISSUED |
|---|---|---|---|
| 20002243 | NEW CONSTR | 0 | 05/01/2020 |

## SALES DATA

| OFF RECORD Number | DATE | TYPE INST | Q / U | V / I | RSN CD | SALE PRICE |
|---|---|---|---|---|---|---|
| 2298/0468 | 8/14/2019 | QC | U | V | 11 | 100 |
| GRANTOR: VILLA ROBERT J | | | | | | |
| GRANTEE: GENOVESE JOHN T & J | | | | | | |
| 2263/1990 | 3/20/2019 | QC | U | V | 11 | 100 |
| GRANTOR: VILLA ROBERT | | | | | | |
| GRANTEE: GENOVESE JOHN T & J | | | | | | |

## BUILDING NOTES

## BUILDING DIMENSIONS

BAS=[YR=2020] W24 FSP=[YR=2020] W36 S10 E13 N2 E10 S2 E13 N10 $ S10 W13 N2 W10 S2 W13 S32 FOP=[YR=2020] S10 E36 FGR=[YR=2020] E24 N24 W8 FST=[YR=2020] W5 S4 E5 N4 $ S4 W16 S20 $ N10 W13 S2 W10 N2 W13 $ E13 S2 E10 N2 E13 N10 E11 N4 E13 N28 $ PTR= E30 FUS=[YR=2020] E14 STR=[YR=2020] E9 S13 W5 S7 W4 N20 $ S20 E4 N7 E5 N13 E13 S32 W36 N32 $ W30 $.

## EXTRA FEATURES

| LN | OB/XF CODE | DESCRIPTION | BLD | CAP | L | W | UNITS | UT | Adj R | ADJ UNIT PRICE | ORIG COND | YEAR ON | YEAR ACTUAL | Q | % COND | OB/XF MKT VALUE | NOTES |
|---|---|---|---|---|---|---|---|---|---|---|---|---|---|---|---|---|---|
| 1 | 0500 | FP-PRE FAB | 0 | 100 | 0 | 0 | 1.00 | UT | 3,500.00 | 3,500.00 | 100 | 2020 | 2020 | 3 | 99 | 3,465 | |
| 2 | 0811 | CONCRETE B | 0 | 100 | 0 | 0 | 1,349.00 | SF | 5.20 | 5.20 | 100 | 2020 | 2020 | 3 | 98 | 6,875 | |

## LAND DESCRIPTION

TOTAL OB/XF 10,340

| LN | USE CODE | CLS | LAND USE DESCRIPTION | CAP | RD | LOC ZONE | FRONT | DEPTH | TOT LND UTS | UNIT TYPE | DT | DPTH FACT | % COND | TOT ADJ | UNIT PRICE | ADJ UNIT PRICE | LAND VALUE | OTHER ADJUSTMENTS AND NOTES | YEAR | DENSITY | DECL | FRZ | YR | CONSRV |
|---|---|---|---|---|---|---|---|---|---|---|---|---|---|---|---|---|---|---|---|---|---|---|---|---|
| 1 | 000100 | C | RES | 100 | | RSF-1 | 0.00 | 0.00 | 1.00 | UT | | 1.00 | 1.00 | 1.00 | 300,000.00 | 300,000.00 | 300,000 | | | | | | | |

REVIEW DATE 01/31/2024 BY KBA Total Acres: 0.00 Total Land Value: 300,000 Market: 0 Agricultural: 0 Common: 300,000 PRINTED 07/30/2025 BY SYS