LOT 94
IN OR 2072/1153
OCEAN BREEZE AT AMELIA PB 8/91

RYAN LIVING TRUST/RYAN JOHN TRUSTEE
96167 OCEAN BREEZE DR
FERNANDINA BEACH, FL 32034

2025

00-00-30-0741-0094-0000

BUILDING CHARACTERISTICS

ELEMENT	CD	CONSTRUCTION
Exterior Wall	16	WD FR STUC 100
Roof Structur	08	IRREGULAR 100
Roof Cover	03	COMP SHNGL 100
Interior Wall	05	DRYWALL 100
Interior Floo	11	CLAY TILE 70
Interior Floo	14	CARPET 30
Air Condition	03	CENTRAL 100
Heating Type	04	AIR DUCTED 100
Bedrooms		4 100
Bathrooms		3.5 100
Frame	02	WOOD FRAME 100
Stories	1.	1. 100
Units		0 100
Occupancy	00	NONE 100
Quality	04	Quality Level 04

DOR CODE 0100 SINGLE FAMILY
MAP NUM | MKT AREA 02
NEIGHBORHOOD/LOC 2122.00

AREA TYPE	TOTAL GROSS AREA	PCT OF BASE	YEAR	TOT ADJ AREA	SUBAREA MARKET VALUE
BAS	2,828	100	2016	2,828	497,665
FGR	709	55	2016	390	68,631
FOP	39	30	2016	12	2,112
FOP	195	30	2016	58	10,207
PTO	550	5	2022	28	4,928
TOTALS	4,321			3,316	583,542

MARKET ADJUSTMENTS

TYPE	MDL	EFF. AREA	TOT ADJ PTS	EFF. BASE RATE	REPL. COST NEW	AYB	EYB	ECON	FNCT		NORM	% COND
0500	01	3,316	116.0166	183.31	607,856	2016	2016	0	0	0	4.00	96.00

1 SFR CUST – 100% - 2017 Heated Area: 2828 HX Base Yr 2017

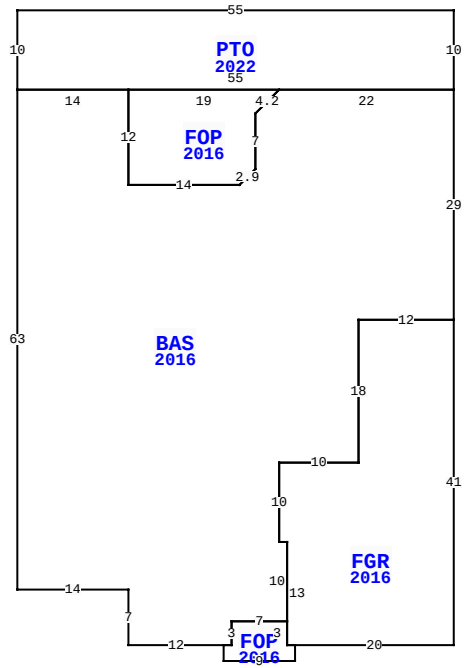

96167 OCEAN BREEZE DR, FERNANDINA BEACH

BLD DATE		LGL DATE	
XF DATE		LAND DATE	
INC DATE		AG DATE	

NASSAU COUNTY PROPERTY

PAGE 1 of 1 8

VALUATION SUMMARY

VALUATION BY		STANDARD
Tax Group: 8	Tax Dist:	
BUILDING MARKET VALUE		583,542
TOTAL MARKET OB/XF VALUE		6,394
TOTAL LAND VALUE - MARKET		300,000
TOTAL MARKET VALUE		889,936
SOH/AGL Deduction		358,967
ASSESSED VALUE		530,969
TOTAL EXEMPTION VALUE	HX HB	50,722
BASE TAXABLE VALUE		480,247
TOTAL JUST VALUE		889,936
NCON VALUE		0
INCOME VALUE		
PREVIOUS YEAR MKT VALUE		863,314

PERMIT NUM	DESCRIPTION	AMT	ISSUED
B1531167	CO ISSUED	0	02/25/2016
B1531167	NEW CONSTR	352,225	09/01/2015

SALES DATA

OFF RECORD Number	DATE	TYPE INST	Q / U	V / I	RSN CD	SALE PRICE
2072/1153	8/23/2016	WD	U	I	11	100
GRANTOR: RYAN JOHN WILLIAM & K						
GRANTEE: RYAN LIVING TRUST						
2030/0237	2/22/2016	WD	Q	I	01	521,900
GRANTOR: D S WARE HOMES LLC						
GRANTEE: RYAN JOHN WILLIAM &						

BUILDING NOTES

BUILDING DIMENSIONS

PTO=[YR=2022] W55 S10 BAS=[YR=2016] S63 E14 S7 E12 FOP=[YR=2016] S2 E9 N2 FGR=[YR=2016] E20 N41 W12 S18 W10 S10 E1 S13 E1$ W1 N3 W7 S3 W1$ E1 N3 E7 N10 W1 N10 E10 N18 E12 N29 W22 FOP=[YR=2016] W19 S12 E14 U2 R2 N7 R3 U3 $ D3 L3 S7 D2 L2 W14 N12 W14$ E55 N10 $.

EXTRA FEATURES

LN	OB/XF CODE	DESCRIPTION	BLD	CAP	L	W	UNITS	UT	Adj R	ADJ UNIT PRICE	ORIG COND	YEAR ON	YEAR ACTUAL	Q	% COND	OB/XF MKT VALUE	NOTES
1	0855	CONC PAVER	0	100	0	0	646.00	SF	10.00	10.00	100	2016	2016	3	95	6,137	
2	0855	CONC PAVER	0	100	0	0	27.00	SF	10.00	10.00	100	2016	2016	3	95	257	

LAND DESCRIPTION

TOTAL OB/XF 6,394

LN	USE CODE	CLS	LAND USE DESCRIPTION	CAP	RD	LOC ZONE	FRONT	DEPTH	TOT LND UTS	UNIT TYPE	DT	DPTH FACT	% COND	TOT ADJ	UNIT PRICE	ADJ UNIT PRICE	LAND VALUE	OTHER ADJUSTMENTS AND NOTES	YEAR	DENSITY	DECL	FRZ	YR	CONSRV
1	000100	C	RES	100		PUD	0.00	0.00	1.00	LT		1.00	1.00	1.00	300,000.00	300,000.00	300,000							

REVIEW DATE 01/14/2021 BY TWA Total Acres: 0.00 Total Land Value: 300,000 Market: 0 Agricultural: 0 Common: 300,000 PRINTED 07/30/2025 BY SYS