PT OF LOT 78
IN OR 1870/1666
SUB PT OF SEC 4 PBK 0/59

HAENTJENS WALTER D III
2737 AMELIA RD
FERNANDINA BEACH, FL 32034

2025

00-00-30-0740-0078-0220

NASSAU COUNTY PROPERTY

BUILDING CHARACTERISTICS

ELEMENT	CD	CONSTRUCTION
Exterior Wall	10	ABOVE AVG 100
Roof Structur	08	IRREGULAR 100
Roof Cover	03	COMP SHNGL 100
Interior Wall	05	DRYWALL 100
Interior Floo	14	CARPET 60
Interior Floo	11	CLAY TILE 40
Air Condition	03	CENTRAL 100
Heating Type	04	AIR DUCTED 100
Bedrooms		4 100
Bathrooms		3 100
Frame	02	WOOD FRAME 100
Stories	2.	2. 100
Units		0 100
Occupancy	00	NONE 100
Quality	05	Quality Level 05
DOR CODE	0100	SINGLE FAMILY
MAP NUM		MKT AREA 02
NEIGHBORHOOD/LOC	2021.00	

AREA TYPE	TOTAL GROSS AREA	PCT OF BASE	YEAR	TOT ADJ AREA	SUBAREA MARKET VALUE
BAS	1,642	100	2014	1,642	238,118
FDG	780	60	2014	468	67,868
FGR	689	55	2014	379	54,961
FOP	246	30	2014	74	10,731
FOP	246	30	2014	74	10,731
FST	15	55	2014	8	1,160
FUS	876	100	2014	876	127,035
TOTALS	4,494			3,521	510,604

MARKET ADJUSTMENTS

TYPE	MDL	EFF. AREA	TOT ADJ PTS	EFF. BASE RATE	REPL. COST NEW	AYB	EYB	ECON	FNCT		NORM	% COND
0900	01	3,521	115.0380	151.85	534,664	2014	2014	0	0	0	4.50	95.50

1 SNGL FAM – 100% - 2015 Heated Area: 2518 HX Base Yr 2015

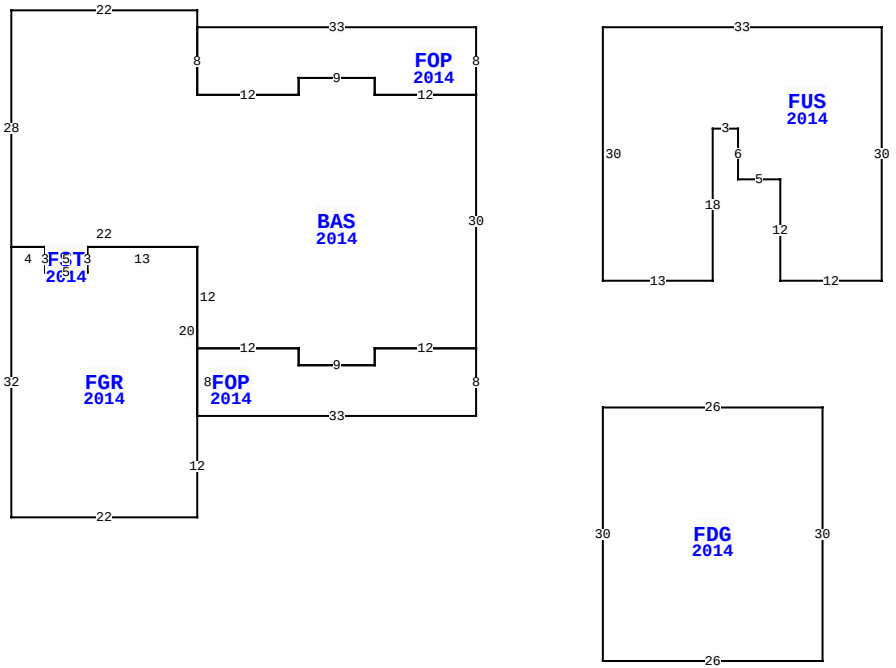

2737 AMELIA RD, FERNANDINA BEACH

BLD DATE		LGL DATE	
XF DATE		LAND DATE	04/29/2025 MLU
INC DATE		AG DATE	

VALUATION SUMMARY

VALUATION BY		STANDARD
Tax Group: 8	Tax Dist:	
BUILDING MARKET VALUE		510,604
TOTAL MARKET OB/XF VALUE		49,637
TOTAL LAND VALUE - MARKET		260,820
TOTAL MARKET VALUE		821,061
SOH/AGL Deduction		370,778
ASSESSED VALUE		450,283
TOTAL EXEMPTION VALUE	HX HB	50,722
BASE TAXABLE VALUE		399,561
TOTAL JUST VALUE		821,061
NCON VALUE		0
INCOME VALUE		
PREVIOUS YEAR MKT VALUE		785,653

PERMIT NUM	DESCRIPTION	AMT	ISSUED
C1327587	CO ISSUED	0	03/01/2014
B1328024	SWIM POOL	29,000	11/01/2013
B1327587	NEW CONSTR	310,151	08/01/2013

SALES DATA

OFF RECORD Number	DATE	TYPE INST	Q U	V I	RSN CD	SALE PRICE
1870/1666	7/31/2013	WD	Q	V	02	85,000
GRANTOR: JOHNSON JEFFERY W						
GRANTEE: HAENTJENS WALTER D						
1588/0791	10/07/2008	WD	Q	V		135,000
GRANTOR: ZANADO INVESTMENT COR						
GRANTEE: JOHNSON JEFFERY W &						

BUILDING NOTES

BUILDING DIMENSIONS

FOP=[YR=2014] W33 BAS=[YR=2014] N2 W22 S28 FGR=[YR=2014] S32 E22 N12 FOP=[YR=2014] E33 N8 W12 S2 W9 N2 W12 S8$ N20 W13 FST=[YR=2014] W5 S3 E5 N3$ S3 W5 N3 W4$ E22 S12 E12 S2 E9 N2 E12 N30 W12 N2 W9 S2 W12 N8 $ S8 E12 N2 E9 S2 E12 N8$ PTR= E15 FUS=[YR=2014] E33 S30 W12 N12 W5 N6 W3 S18 W13 N30$ W15$ PTR= E15 S45 FDG=[YR=2014] S30 E26 N30 W26$ N45W15$.

EXTRA FEATURES

LN	OB/XF CODE	DESCRIPTION	BLD	CAP	L	W	UNITS	UT	Adj R	ADJ UNIT PRICE	ORIG COND	YEAR ON	YEAR ACTUAL	Q	% COND	OB/XF MKT VALUE	NOTES
1	0812	CONCRETE C	0	100	0	0	3,101.00	SF	4.00	4.00	100	2014	2014	3	94	11,660	
2	0810	CONCRETE A	0	100	57	3	171.00	SF	6.50	6.50	100	2014	2014	3	94	1,045	
3	0861	POOL GUNIT	0	100	0	0	324.00	SF	85.00	85.00	100	2014	2014	3	71	19,553	
4	0855	CONC PAVER	0	100	0	0	621.00	SF	7.00	7.00	100	2014	2014	3	94	4,086	
5	0476	VF 6 SBPL	0	100	0	0	390.00	LF	32.00	32.00	100	2014	2014	3	85	10,608	
6	0470	VNYL GATE	0	100	0	0	3.00	UT	300.00	300.00	100	2014	2014	3	85	765	
7	0504	FP-ELECTRI	0	100	0	0	1.00	UT	2,000.00	2,000.00	100	2014	2014	3	96	1,920	

LAND DESCRIPTION

TOTAL OB/XF 49,637

LN	USE CODE	CLS	LAND USE DESCRIPTION	CAP	RD	LOC ZONE	FRONT	DEPTH	TOT LND UTS	UNIT TYPE	DT	DPTH FACT	% COND	TOT ADJ	UNIT PRICE	ADJ UNIT PRICE	LAND VALUE	OTHER ADJUSTMENTS AND NOTES	YEAR	DENSITY	DECL	FRZ	YR	CONSRV
1	000100	C	RES	100		RSF-2	0.00	0.00	0.72	AC		1.00	1.00	1.15	315,000.00	362,250.00	260,820							

REVIEW DATE 01/18/2019 BY DJA Total Acres: 0.72 Total Land Value: 260,820 Market: 0 Agricultural: 0 Common: 260,820 PRINTED 07/30/2025 BY SYS