PT OF LOTS 60,61,78 & ABND
R/W IN OR 1941/1711
SUB OF SEC 4-2N-28E PBK O/59 &

CARROLL FAMILY TRUST/CARROLL JUSTIN M TRUSTEE
2657 AMELIA RD
FERNANDINA BEACH, FL 32034

2025

00-00-30-0740-0060-0040

BUILDING CHARACTERISTICS

ELEMENT	CD	CONSTRUCTION
Exterior Wall	10	ABOVE AVG 100
Roof Structur	03	GABLE/HIP 100
Roof Cover	03	COMP SHNGL 100
Interior Wall	05	DRYWALL 100
Interior Floo	13	LVT/LAMNT 100
Air Condition	03	CENTRAL 100
Heating Type	04	AIR DUCTED 100
Bedrooms		3 100
Bathrooms		2.5 100
Frame	02	WOOD FRAME 100
Stories	2.	2. 100
Units		0 100
Occupancy	00	NONE 100
Quality	03	Quality Level 03

DOR CODE 0100 SINGLE FAMILY
MAP NUM | MKT AREA 02
NEIGHBORHOOD/LOC 2021.00

AREA TYPE	TOTAL GROSS AREA	PCT OF BASE	YEAR	TOT ADJ AREA	SUBAREA MARKET VALUE
BAS	1,500	100	2019	1,500	194,584
DCK	64	10	2019	6	778
DCK	431	10	2019	43	5,578
FCP	576	25	2019	144	18,680
FOP	30	30	2019	9	1,167
FOP	240	30	2019	72	9,340
FSP	130	40	2019	52	6,745
FST	240	55	2019	132	17,124
FUS	1,060	100	2019	1,060	137,506
STP	20	10	2019	2	260
TOTALS	4,372			3,031	393,189

MARKET ADJUSTMENTS

TYPE	MDL	EFF. AREA	TOT ADJ PTS	EFF. BASE RATE	REPL. COST NEW	AYB	EYB	ECON	FNCT		NORM	% COND
0900	01	3,031	100.2800	132.37	401,213	2019	2019	0	0	0	2.00	98.00

2 SNGL FAM – 100% - 2020 Heated Area: 2560 HX Base Yr 2020

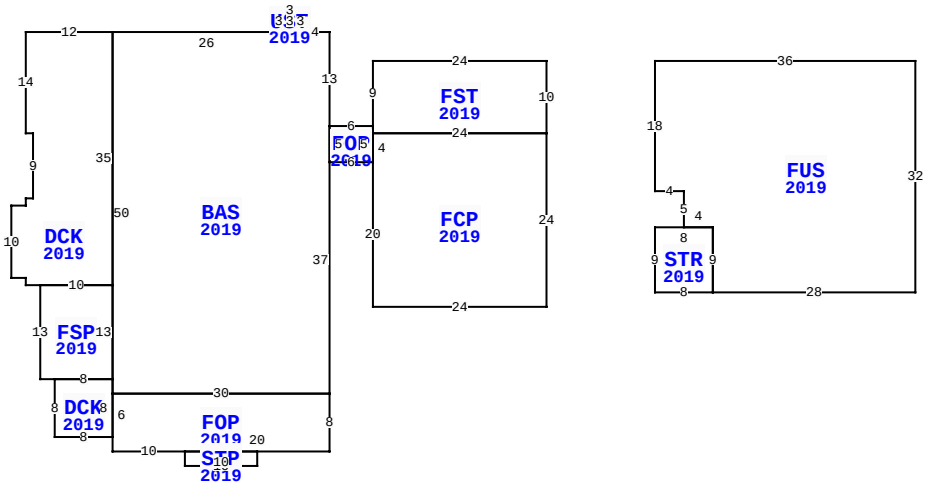

** This building has 12 Sub-Areas

2657 AMELIA RD, FERNANDINA BEACH

BLD DATE		LGL DATE	
XF DATE		LAND DATE	04/29/2025 MLU
INC DATE		AG DATE	

EXTRA FEATURES

L N	OB/XF CODE	DESCRIPTION	BLD	CAP	L	W	UNITS	UT	Adj R	ADJ UNIT PRICE	ORIG COND	YEAR ON	YEAR ACTUAL	Q	% COND	OB/XF MKT VALUE	NOTES
1	0681	POLE SHED	0	100	0	0	1,082.00	SF	4.50	4.50	100	1980	1980	3	20	974	
2	0940	SHEDS/PORT	0	100	24	18	432.00	SF	20.10	20.10	100	1985	1985	3	20	1,737	
3	0940	SHEDS/PORT	0	100	24	14	336.00	SF	30.00	30.00	100	1986	1986	3	20	2,016	
4	0350	CARPORT WD	0	100	32	23	736.00	SF	13.00	13.00	100	1990	1990	3	20	1,914	

NASSAU COUNTY PROPERTY

PAGE 1 of 2 8

VALUATION SUMMARY

VALUATION BY		STANDARD
Tax Group: 8	Tax Dist:	
BUILDING MARKET VALUE		443,916
TOTAL MARKET OB/XF VALUE		6,641
TOTAL LAND VALUE - MARKET		874,125
TOTAL MARKET VALUE		1,324,682
SOH/AGL Deduction		755,951
ASSESSED VALUE		568,731
TOTAL EXEMPTION VALUE	HX HB	50,722
BASE TAXABLE VALUE		518,009
TOTAL JUST VALUE		1,324,682
NCON VALUE		50,727
INCOME VALUE		
PREVIOUS YEAR MKT VALUE		1,213,378

PERMIT NUM	DESCRIPTION	AMT	ISSUED
SP250000887	POOL	62,000	01/27/2025
23004010	1/1 ACC STRUCTURE	79,597	04/03/2023
C1900455	CO ISSUED	0	01/15/2019
B1805790	DEMOLITION	1,200	06/07/2018
B1801356	NEW CONSTR	341,743	02/07/2018

SALES DATA

OFF RECORD Number	DATE	TYPE INST	Q U	V I	RSN CD	SALE PRICE
2594/0977	10/05/2022	WD	U	I	11	100
GRANTOR: CARROLL KIMBERLY & JU						
GRANTEE: CAROLL FAMILY TRUST						
2299/1281	8/21/2019	FJ	U	I	11	100
GRANTOR: CLERK OF COURT						
GRANTEE: CARROLL KIMBERLY &						

BUILDING NOTES

BUILDING DIMENSIONS

FST=[YR=2019] W24 S9 FOP=[YR=2019] W6 BAS=[YR=2019] N13 W4 UST=[YR=2019] N3W3S3 E3$ W26 DCK=[YR=2019] W12 S14 E1 S9 W1 S1 W2 S10 E2 S1 E2 FSP=[YR=2019] S13 E2 DCK=[YR=2019] S8 E8 FOP=[YR=2019] S2E10 STP=[YR=2019] S2 E10 N2 W10$ E20 N8 W30 S6$ N8 W8$ E8 N13 W10$ E10 N35$ S50 E30 N37$ S5 E6 FCP=[YR=2019] S20 E24 N24 W24 S4$ N5$ S1 E24 N10$ PTR=E15 FUS=[YR=2019] E36 S32 W28 STR=[YR=2019] W8 N9 E8 S9$ N9 W4 N5 W4 N18$ W15 $.

LAND DESCRIPTION

TOTAL OB/XF 6,641

L N	USE CODE	CLS	LAND USE DESCRIPTION	CAP	R D	LOC ZONE	FRONT	DEPTH	TOT LND UTS	UNIT TYPE	D T	DPTH FACT	% COND	TOT ADJ	UNIT PRICE	ADJ UNIT PRICE	LAND VALUE	OTHER ADJUSTMENTS AND NOTES	YEAR	DENSITY	DECL	FRZ	YR	CONSRV
1	000100	C	RES	100		RSF-2	0.00	0.00	5.55	AC		1.00	1.00	0.50	315,000.00	157,500.00	874,125							

REVIEW DATE 12/16/2024 BY HS Total Acres: 5.55 Total Land Value: 874,125 Market: 0 Agricultural: 0 Common: 874,125 PRINTED 07/30/2025 BY SYS

PT OF LOTS 60,61,78 & ABND
R/W IN OR 1941/1711
SUB OF SEC 4-2N-28E PBK O/59 &

CARROLL FAMILY TRUST/CARROLL JUSTIN M TRUSTEE
2657 AMELIA RD
FERNANDINA BEACH, FL 32034

2025

00-00-30-0740-0060-0040

NASSAU COUNTY PROPERTY

BUILDING CHARACTERISTICS

ELEMENT	CD	CONSTRUCTION
Exterior Wall	12	CEDAR 100
Roof Structur	03	GABLE/HIP 100
Roof Cover	12	MODULAR MT 100
Interior Wall	06	CUST PANEL 100
Interior Floo	13	LVT/LAMNT 100
Air Condition	03	CENTRAL 100
Heating Type	03	FORCED AIR 100
Bedrooms		1 100
Bathrooms		1 100
Frame	02	WOOD FRAME 100
Stories	2.	2. 100
Quality	06	Quality Level 06

DOR CODE 0100 SINGLE FAMILY
MAP NUM | MKT AREA 02
NEIGHBORHOOD/LOC 2021.00

AREA TYPE	TOTAL GROSS AREA	PCT OF BASE	YEAR	TOT ADJ AREA	SUBAREA MARKET VALUE
DCK	260	10	2025	26	2,266
FUS	416	100	2025	416	36,259
STR	52	10	2025	5	436
UCP	416	20	2025	83	7,234
UOP	260	20	2025	52	4,532
TOTALS	1,404			582	50,727

MARKET ADJUSTMENTS

TYPE	MDL	EFF. AREA	TOT ADJ PTS	EFF. BASE RATE	REPL. COST NEW	AYB	EYB	ECON	FNCT		NORM	% COND
0150	01	582	164.4500	87.16	50,727	2024	2024	0	0	0	0.00	100.00

3 ACCESORY U – 0% - 2025 Heated Area: 416 HX Base Yr 2020

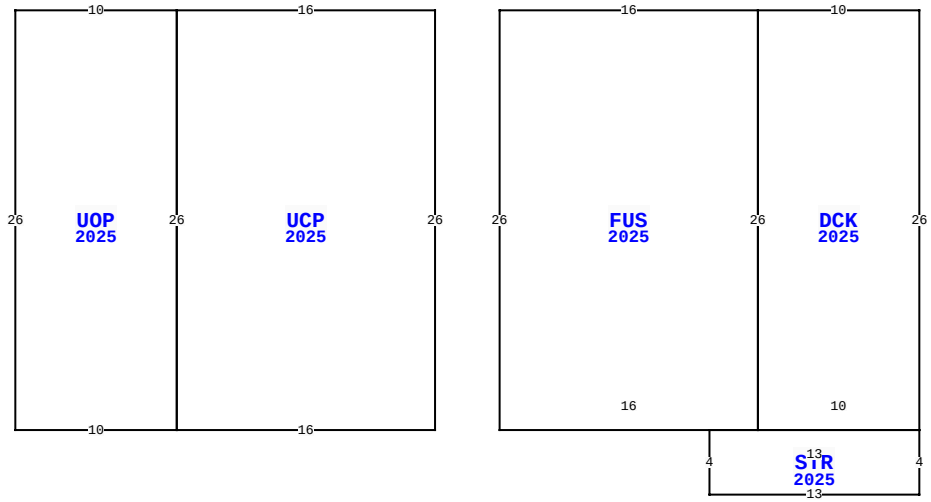

2657 AMELIA RD, FERNANDINA BEACH

BLD DATE		LGL DATE	
XF DATE		LAND DATE	04/29/2025 MLU
INC DATE		AG DATE	

VALUATION SUMMARY

VALUATION BY		STANDARD
Tax Group: 8	Tax Dist:	
BUILDING MARKET VALUE		443,916
TOTAL MARKET OB/XF VALUE		6,641
TOTAL LAND VALUE - MARKET		874,125
TOTAL MARKET VALUE		1,324,682
SOH/AGL Deduction		755,951
ASSESSED VALUE		568,731
TOTAL EXEMPTION VALUE	HX HB	50,722
BASE TAXABLE VALUE		518,009
TOTAL JUST VALUE		1,324,682
NCON VALUE		50,727
INCOME VALUE		
PREVIOUS YEAR MKT VALUE		1,213,378

PERMIT NUM	DESCRIPTION	AMT	ISSUED

SALES DATA

OFF RECORD Number	DATE	TYPE INST	Q U	V I	RSN CD	SALE PRICE
2594/0977	10/05/2022	WD	U	I	11	100
GRANTOR: CARROLL KIMBERLY & JU						
GRANTEE: CAROLL FAMILY TRUST						
2299/1281	8/21/2019	FJ	U	I	11	100
GRANTOR: CLERK OF COURT						
GRANTEE: CARROLL KIMBERLY &						

BUILDING NOTES

BUILDING DIMENSIONS

UCP=[YR=2025;ORIG=30,10] E16 S26 W16 N26 $
UOP=[YR=2025;ORIG=30,10] W10 S26 E10 N26 $
FUS=[YR=2025;ORIG=50,10] E16 S26 W16 N26 $
DCK=[YR=2025;ORIG=66,10] E10 S26 W10 N26 $
STR=[YR=2025;ORIG=76,36] W13 S4 E13 N4 $
.

EXTRA FEATURES

L N	OB/XF CODE	DESCRIPTION	BLD	CAP	L	W	UNITS	UT	Adj R	ADJ UNIT PRICE	ORIG COND	YEAR ON	YEAR ACTUAL	Q	% COND	OB/XF MKT VALUE	NOTES

LAND DESCRIPTION

TOTAL OB/XF 0

L N	USE CODE	CLS	LAND USE DESCRIPTION	CAP	R D	LOC ZONE	FRONT	DEPTH	TOT LND UTS	UNIT TYPE	D T	DPTH FACT	% COND	TOT ADJ	UNIT PRICE	ADJ UNIT PRICE	LAND VALUE	OTHER ADJUSTMENTS AND NOTES	YEAR	DENSITY	DECL	FRZ	YR	CONSRV

REVIEW DATE 12/16/2024 BY HS Total Acres: 5.55 Total Land Value: 874,125 Market: 0 Agricultural: 0 Common: 874,125 PRINTED 07/30/2025 BY SYS