PT OF LOTS 58 & 59
IN OR 1314/186 & OR 2020/902
ESMT OR 1422/1371 &

TAYLOR MICHAEL S & MICHELLE L
96043 DEES LANDING
FERNANDINA BEACH, FL 32034

2025

00-00-30-0740-0059-0100

NASSAU COUNTY PROPERTY

BUILDING CHARACTERISTICS

ELEMENT	CD	CONSTRUCTION
Exterior Wall	20	FACE BRICK 100
Roof Structur	03	GABLE/HIP 100
Roof Cover	03	COMP SHNGL 100
Interior Wall	05	DRYWALL 100
Interior Floo	12	HARDWOOD 60
Interior Floo	14	CARPET 40
Air Condition	03	CENTRAL 100
Heating Type	04	AIR DUCTED 100
Bedrooms		3 100
Bathrooms		2.5 100
Frame	02	WOOD FRAME 100
Stories	1.	1. 100
Units		0 100
Occupancy	00	NONE 100
Quality	03	Quality Level 03
DOR CODE	0100	SINGLE FAMILY
MAP NUM		MKT AREA 02
NEIGHBORHOOD/LOC	2021.00	

AREA TYPE	TOTAL GROSS AREA	PCT OF BASE	YEAR	TOT ADJ AREA	SUBAREA MARKET VALUE
BAS	2,504	100	2006	2,504	289,329
FGR	701	55	2006	386	44,601
FOP	252	30	2006	76	8,781
FOP	378	30	2006	113	13,057
UOP	8	20	2006	2	231
UOP	12	20	2006	2	231
UOP	29	20	2006	6	693
TOTALS	3,884			3,089	356,924

MARKET ADJUSTMENTS

TYPE	MDL	EFF. AREA	TOT ADJ PTS	EFF. BASE RATE	REPL. COST NEW	AYB	EYB	ECON	FNCT		NORM	% COND
0900	01	3,089	101.2000	133.58	412,629	2006	2006	0	0	0	13.50	86.50

1 SNGL FAM – 100% - 2007 Heated Area: 2504 HX Base Yr 2007

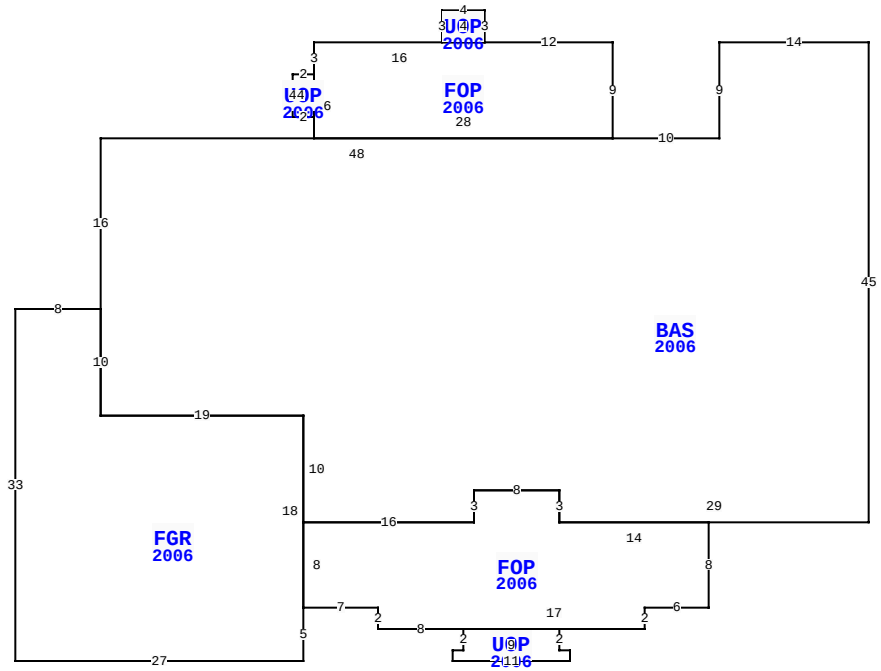

BLD DATE	02/22/2007	KK	LGL DATE
XF DATE	02/22/2007	KK	LAND DATE 04/29/2025 MLU
INC DATE			AG DATE

96043 DEES LDG, FERNANDINA BEACH

VALUATION SUMMARY

VALUATION BY		STANDARD
Tax Group: 8	Tax Dist:	
BUILDING MARKET VALUE		356,924
TOTAL MARKET OB/XF VALUE		63,230
TOTAL LAND VALUE - MARKET		693,000
TOTAL MARKET VALUE		1,113,154
SOH/AGL Deduction		685,635
ASSESSED VALUE		427,519
TOTAL EXEMPTION VALUE	HX HB	50,722
BASE TAXABLE VALUE		376,797
TOTAL JUST VALUE		1,113,154
NCON VALUE		0
INCOME VALUE		
PREVIOUS YEAR MKT VALUE		1,065,996

PERMIT NUM	DESCRIPTION	AMT	ISSUED
20004376	GARAGE	31,298	05/21/2020
20004395	SWIM POOL	30,000	05/21/2020
M11496	MECH OTHER	0	05/01/2006
E16719	ELEC OTHER	6,000	02/01/2006
P10805	OTHER	0	02/01/2006
C16972	CO ISSUED	265,000	01/01/2006

SALES DATA

OFF RECORD Number	DATE	TYPE INST	Q U	V I	RSN CD	SALE PRICE
2020/0902	12/21/2015	WD	U	V	30	46,000
GRANTOR: DEES MICHAEL D						
GRANTEE: TAYLOR MICHAEL S &						
1314/0186	5/03/2005	QC	U	V	07	100
GRANTOR: DEES MICHAEL						
GRANTEE: TAYLOR MICHAEL S &						

BUILDING NOTES

BUILDING DIMENSIONS

BAS=[YR=2006] W14 S9 W10 FOP=[YR=2006] N9 W12 UOP=[YR=2006] N3 W4 S3 E4$W16 S 3 UOP=[YR=2006] W2 S4 E2 N4$ S6 E28$ W48 S16 FGR=[YR=2006] W8 S33 E27 N5 FOP=[YR=2006] E7 S2 E8 UOP=[YR=2006] S2 W1 S1 E11 N1 W1 N2 W9$ E17 N2 E6 N8 W14 N3 W8 S3 W16 S8$ N18 W19 N10$ S10 E19 S10 E16 N3 E 8 S3 E29 N45$.

EXTRA FEATURES

LN	OB/XF CODE	DESCRIPTION	BLD	CAP	L	W	UNITS	UT	Adj R	ADJ UNIT PRICE	ORIG COND	YEAR ON	YEAR ACTUAL	Q	% COND	OB/XF MKT VALUE	NOTES
1	0500	FP-PRE FAB	0	100	0	0	1.00	UT	3,500.00	3,500.00	100	2006	2006	3	89	3,115	
2	0812	CONCRETE C	0	100	0	0	1,975.00	SF	4.00	4.00	100	2006	2006	3	86	6,794	
3	0803	ASPHALT C	0	100	0	0	2,164.00	SF	2.00	2.00	100	2006	2006	3	56	2,424	
4	0861	POOL GUNIT	0	100	30	14	420.00	SF	63.75	63.75	100	2020	2020	3	90	24,098	
5	0855	CONC PAVER	0	100	0	0	756.00	SF	10.00	10.00	100	2020	2020	3	98	7,409	
6	0510	GARAGE WD-	0	100	10	36	360.00	SF	35.00	35.00	100	2020	2020	3	90	11,340	
7	0351	CARPORT MT	0	100	26	36	936.00	SF	10.00	10.00	100	2020	2020	3	86	8,050	

LAND DESCRIPTION

TOTAL OB/XF 63,230

LN	USE CODE	CLS	LAND USE DESCRIPTION	CAP	RD	LOC ZONE	FRONT	DEPTH	TOT LND UTS	UNIT TYPE	DT	DPTH FACT	% COND	TOT ADJ	UNIT PRICE	ADJ UNIT PRICE	LAND VALUE	OTHER ADJUSTMENTS AND NOTES	YEAR	DENSITY	DECL	FRZ	YR	CONSRV
1	000100	C	RES	100		RSF-2	0.00	0.00	1.10	AC		1.00	1.00	1.00	315,000.00	315,000.00	346,500							
2	000100	C	RES	100		RSF-2	0.00	0.00	1.10	AC		1.00	1.00	1.00	315,000.00	315,000.00	346,500							

REVIEW DATE 04/27/2021 BY RK Total Acres: 2.20 Total Land Value: 693,000 Market: 0 Agricultural: 0 Common: 693,000 PRINTED 07/30/2025 BY SYS