LOT 5
IN OR 2731/430
SIMMONS REPLAT OF PT OF

EVANS MARYANNE DENISE L/E/
4996 FIRST COAST HWY
FERNANDINA BEACH, FL 32034

2025

00-00-30-0645-0005-0000

NASSAU COUNTY PROPERTY

BUILDING CHARACTERISTICS

ELEMENT	CD	CONSTRUCTION
Exterior Wall	16	WD FR STUC 100
Roof Structur	08	IRREGULAR 100
Roof Cover	03	COMP SHNGL 100
Interior Wall	05	DRYWALL 100
Interior Floo	11	CLAY TILE 70
Interior Floo	14	CARPET 30
Air Condition	03	CENTRAL 100
Heating Type	04	AIR DUCTED 100
Bedrooms		3 100
Bathrooms		2 100
Frame	02	WOOD FRAME 100
Stories	1.	1. 100
Units		0 100
Occupancy	00	NONE 100
Quality	03	Quality Level 03
DOR CODE	0100	SINGLE FAMILY
MAP NUM		MKT AREA 03
NEIGHBORHOOD/LOC	3028.00	

AREA TYPE	TOTAL GROSS AREA	PCT OF BASE	YEAR	TOT ADJ AREA	SUBAREA MARKET VALUE
BAS	2,052	100	1998	2,052	272,731
FGR	672	55	1998	370	49,177
FOP	69	30	1998	21	2,791
PTO	135	5	1998	7	930
TOTALS	2,928			2,450	325,629

MARKET ADJUSTMENTS

TYPE	MDL	EFF. AREA	TOT ADJ PTS	EFF. BASE RATE	REPL. COST NEW	AYB	EYB	ECON	FNCT		NORM	% COND
0900	01	2,450	115.7380	152.77	374,286	1998	1998	0	0	0	13.00	87.00

1 SNGL FAM – 100% - 2020 Heated Area: 2052 HX Base Yr 2020

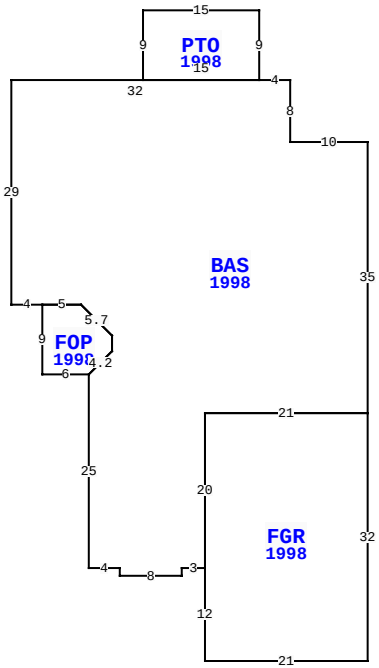

4996 FIRST COAST HWY, FERNANDINA BEACH

BLD DATE		LGL DATE	
XF DATE		LAND DATE	
INC DATE		AG DATE	

VALUATION SUMMARY

VALUATION BY		STANDARD
Tax Group: 8	Tax Dist:	
BUILDING MARKET VALUE		325,629
TOTAL MARKET OB/XF VALUE		16,868
TOTAL LAND VALUE - MARKET		250,000
TOTAL MARKET VALUE		592,497
SOH/AGL Deduction		153,642
ASSESSED VALUE		438,855
TOTAL EXEMPTION VALUE	HX HB	50,722
BASE TAXABLE VALUE		388,133
TOTAL JUST VALUE		592,497
NCON VALUE		0
INCOME VALUE		
PREVIOUS YEAR MKT VALUE		577,507

PERMIT NUM	DESCRIPTION	AMT	ISSUED
B9805084	XFOB	9,000	06/01/1998
B9804899	NEW CONSTR	128,000	04/01/1998

SALES DATA

OFF RECORD Number	DATE	TYPE INST	Q / U	V / I	RSN CD	SALE PRICE
2731/430	7/29/2024	LE	U	I	11	100
GRANTOR: EVANS MARYANNE DENISE						
GRANTEE: EVANS CLINTON B						
2247/1474	1/07/2019	WD	Q	I	01	398,000
GRANTOR: PAYNE CHARLES S & VIV						
GRANTEE: EVANS MARYANNE DENI						

BUILDING NOTES

BUILDING DIMENSIONS

BAS=[YR=1998] W10 N8 W4 PTO=[YR=1998] N9 W15 S9 E15 $ W32 S29 E4 FOP=[YR=1998] S9 E6 U3 R3 N2 L4 U4 W5 $ E5 D4 R4 S2 L3 D3 S25 E4 S1 E8 N1 E3 FGR=[YR=1998] S12 E21 N32 W21 S20 $ N20 E21 N35 $.

EXTRA FEATURES

LN	OB/XF CODE	DESCRIPTION	BLD	CAP	L	W	UNITS	UT	Adj R	ADJ UNIT PRICE	ORIG COND	YEAR ON	YEAR ACTUAL	Q	% COND	OB/XF MKT VALUE	NOTES
1	0810	CONCRETE A	0	100	0	0	2,721.00	SF	6.50	6.50	100	1998	1998	3	73	12,911	
2	0810	CONCRETE A	0	100	0	0	170.00	SF	6.50	6.50	100	1998	1998	3	73	807	
3	0510	GARAGE WD-	0	100	30	12	360.00	SF	35.00	35.00	100	1998	1998	3	25	3,150	

LAND DESCRIPTION

TOTAL OB/XF 16,868

LN	USE CODE	CLS	LAND USE DESCRIPTION	CAP	RD	LOC ZONE	FRONT	DEPTH	TOT LND UTS	UNIT TYPE	DT	DPTH FACT	% COND	TOT ADJ	UNIT PRICE	ADJ UNIT PRICE	LAND VALUE	OTHER ADJUSTMENTS AND NOTES	YEAR	DENSITY	DECL	FRZ	YR	CONSRV
1	000100	C	RES	100		RSF-1	0.00	0.00	1.00	LT		1.00	1.00	1.00	250,000.00	250,000.00	250,000							

REVIEW DATE 05/12/2019 BY KBA Total Acres: 0.00 Total Land Value: 250,000 Market: 0 Agricultural: 0 Common: 250,000 PRINTED 07/30/2025 BY SYS