LOT 3
IN OR 1892/599
SHADOW WOODS SUB PB 4/88

KELLER CHARLES M & LAURA T
1365 SHADOW WOODS LN
FERNANDINA BEACH, FL 32034

2025

00-00-30-0610-0003-0000

NASSAU COUNTY PROPERTY

BUILDING CHARACTERISTICS

ELEMENT	CD	CONSTRUCTION
Exterior Wall	10	ABOVE AVG 100
Roof Structur	08	IRREGULAR 100
Roof Cover	11	SLATE 100
Interior Wall	05	DRYWALL 100
Interior Floo	12	HARDWOOD 50
Interior Floo	14	CARPET 50
Air Condition	03	CENTRAL 100
Heating Type	04	AIR DUCTED 100
Bedrooms		3 100
Bathrooms		3 100
Frame	02	WOOD FRAME 100
Stories	2.	2. 100
Units		0 100
Occupancy	00	NONE 100
Quality	05	Quality Level 05

DOR CODE 0100 SINGLE FAMILY
MAP NUM | MKT AREA 03
NEIGHBORHOOD/LOC 3029.00

AREA TYPE	TOTAL GROSS AREA	PCT OF BASE	YEAR	TOT ADJ AREA	SUBAREA MARKET VALUE
BAS	2,126	100	2016	2,126	335,723
DCK	130	10	2016	13	2,053
FGR	656	55	2016	361	57,006
FOP	220	30	2016	66	10,422
FSP	244	40	2016	98	15,476
FST	276	55	2016	152	24,002
FUS	402	100	2016	402	63,481
PTO	16	5	2016	1	158
STP	32	10	2016	3	474
TOTALS	4,102			3,222	508,794

MARKET ADJUSTMENTS

TYPE	MDL	EFF. AREA	TOT ADJ PTS	EFF. BASE RATE	REPL. COST NEW	AYB	EYB	ECON	FNCT		NORM	% COND
0900	01	3,222	123.9700	163.64	527,248	2016	2016	0	0	0	3.50	96.50

1 SNGL FAM – 100% - 2017 Heated Area: 2528 HX Base Yr 2017

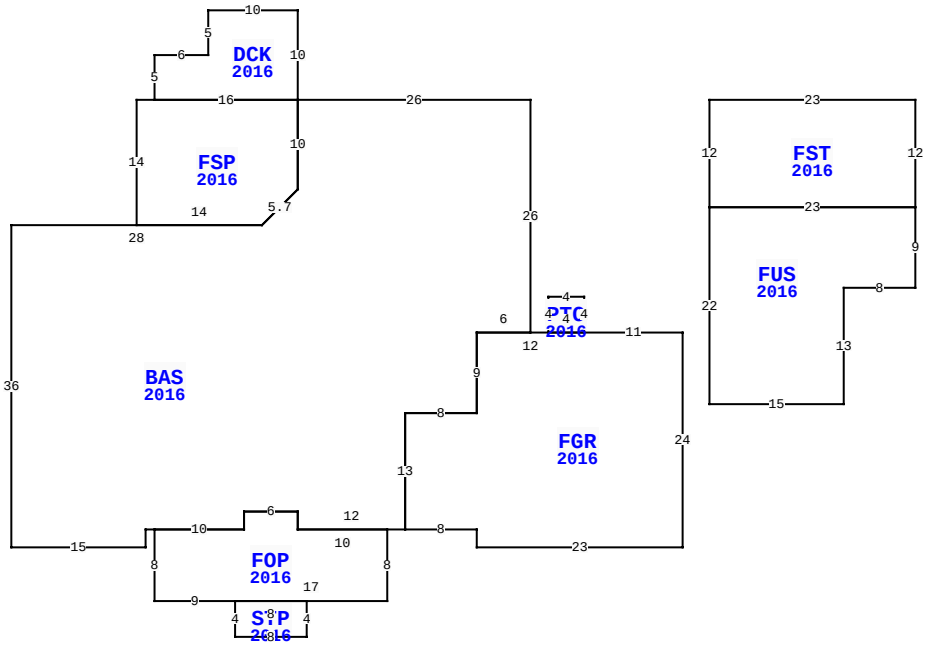

1365 SHADOW WOODS LN, FERNANDINA BEACH

BLD DATE		LGL DATE	
XF DATE		LAND DATE	
INC DATE		AG DATE	

VALUATION SUMMARY

VALUATION BY		STANDARD
Tax Group: 8	Tax Dist:	
BUILDING MARKET VALUE		508,794
TOTAL MARKET OB/XF VALUE		10,184
TOTAL LAND VALUE - MARKET		247,500
TOTAL MARKET VALUE		766,478
SOH/AGL Deduction		271,011
ASSESSED VALUE		495,467
TOTAL EXEMPTION VALUE	HX HB DX	55,722
BASE TAXABLE VALUE		439,745
TOTAL JUST VALUE		766,478
NCON VALUE		0
INCOME VALUE		
PREVIOUS YEAR MKT VALUE		742,073

PERMIT NUM	DESCRIPTION	AMT	ISSUED
B1429671	NEW CONSTR	320,546	12/01/2014

SALES DATA

OFF RECORD Number	DATE	TYPE INST	Q / U	V / I	RSN CD	SALE PRICE
1892/0599	12/03/2013	WD	Q	V	02	125,000
GRANTOR: MANHEIN ROBERT JERE &						
GRANTEE: KELLER CHARLES M &						
0536/1276	2/16/1988	WD	Q	V	06	19,900
GRANTOR: VAN DYKE JANE M						
GRANTEE: MANHEIN ROBERT & L						

BUILDING NOTES

BUILDING DIMENSIONS

BAS=[YR=2016] W26 DCK=[YR=2016] N10 W10 S5 W6 S5 FSP=[YR=2016] W2 S14 E14 U4 R4 N10 W16$ E16$ S10 D4 L4 W28 S36 E15 N2 E1 FOP=[YR=2016] S8 E9 STP=[YR=2016] S4 E8 N4 W8$ E17 N8 W10 N2 W6 S2 W10$ E10 N2 E6 S2 E12 FGR=[YR=2016] E8 S2 E23 N24 W11 PTO=[YR=2016] N4 W4 S4 E4$ W12 S9 W8 S13$ N13 E8 N9 E6 N26$ PTR=E20 FST=[YR=2016] E23 S12 FUS=[YR=2016] S9 W8 S13 W15 N22 E23$ W23 N12$ W20$.

EXTRA FEATURES

LN	OB/XF CODE	DESCRIPTION	BLD	CAP	L	W	UNITS	UT	Adj R	ADJ UNIT PRICE	ORIG COND	YEAR ON	YEAR ACTUAL	Q	% COND	OB/XF MKT VALUE	NOTES
1	0504	FP-ELECTRI	0	100	0	0	1.00	UT	2,000.00	2,000.00	100	2016	2016	3	97	1,940	
2	0811	CONCRETE B	0	100	0	0	1,460.00	SF	5.20	5.20	100	2016	2016	3	95	7,212	
3	0810	CONCRETE A	0	100	0	0	152.00	SF	6.50	6.50	100	2016	2016	3	95	939	
4	0810	CONCRETE A	0	100	3	5	15.00	SF	6.50	6.50	100	2016	2016	3	95	93	

LAND DESCRIPTION

TOTAL OB/XF 10,184

LN	USE CODE	CLS	LAND USE DESCRIPTION	CAP	RD	LOC ZONE	FRONT	DEPTH	TOT LND UTS	UNIT TYPE	DT	DPTH FACT	% COND	TOT ADJ	UNIT PRICE	ADJ UNIT PRICE	LAND VALUE	OTHER ADJUSTMENTS AND NOTES	YEAR	DENSITY	DECL	FRZ	YR	CONSRV
1	000100	C	RES	100	0005	RSF-1	0.00	0.00	1.00	LT		1.00	1.00	0.90	275,000.00	247,500.00	247,500							

REVIEW DATE 05/12/2019 BY KBA Total Acres: 0.00 Total Land Value: 247,500 Market: 0 Agricultural: 0 Common: 247,500 PRINTED 07/30/2025 BY SYS