LOT 2
SEAWALK PB 6/337

LOUMEAU JESSICA G & THOMAS PATRICK
95058 SEAWALK COURT
FERNANDINA BEACH, FL 32034

2025

00-00-30-0609-0002-0000

NASSAU COUNTY PROPERTY

BUILDING CHARACTERISTICS

ELEMENT	CD	CONSTRUCTION
Exterior Wall	16	WD FR STUC 100
Roof Structur	03	GABLE/HIP 100
Roof Cover	03	COMP SHNGL 100
Interior Wall	05	DRYWALL 100
Interior Floo	15	HARDTILE 100
Air Condition	03	CENTRAL 100
Heating Type	04	AIR DUCTED 100
Bedrooms		3 100
Bathrooms		2 100
Frame	02	WOOD FRAME 100
Stories	1.	1. 100
Units		0 100
Occupancy	00	NONE 100
Quality	05	Quality Level 05

DOR CODE 0100 SINGLE FAMILY
MAP NUM | MKT AREA 03
NEIGHBORHOOD/LOC 3032.00

AREA TYPE	TOTAL GROSS AREA	PCT OF BASE	YEAR	TOT ADJ AREA	SUBAREA MARKET VALUE
BAS	2,153	100	2003	2,153	476,994
FGR	460	55	2003	253	56,052
FOP	50	30	2003	15	3,323
FSP	201	40	2003	80	17,724
PTO	45	5	2003	2	443
USP	156	30	2007	47	10,412
TOTALS	3,065			2,550	564,948

MARKET ADJUSTMENTS

TYPE	MDL	EFF. AREA	TOT ADJ PTS	EFF. BASE RATE	REPL. COST NEW	AYB	EYB	ECON	FNCT		NORM	% COND
0500	11	2,550	156.6720	247.54	631,227	2003	2003	0	0	0	10.50	89.50

1 SFR CUST – 100% - 2024 Heated Area: 2153 HX Base Yr 2024

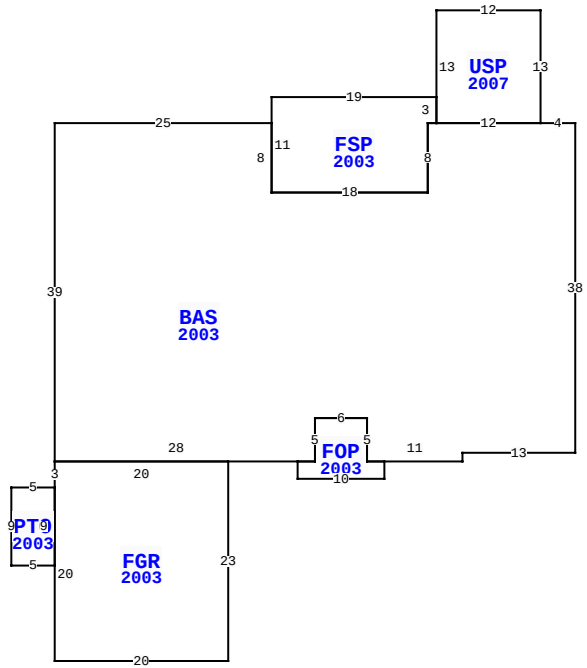

95058 SEAWALK CT, FERNANDINA BEACH

BLD DATE		LGL DATE	
XF DATE		LAND DATE	04/03/2024 MLU
INC DATE		AG DATE	

VALUATION SUMMARY

VALUATION BY		STANDARD
Tax Group: 8	Tax Dist:	
BUILDING MARKET VALUE		564,948
TOTAL MARKET OB/XF VALUE		60,310
TOTAL LAND VALUE - MARKET		350,000
TOTAL MARKET VALUE		975,258
SOH/AGL Deduction		0
ASSESSED VALUE		975,258
TOTAL EXEMPTION VALUE	HX HB	50,722
BASE TAXABLE VALUE		924,536
TOTAL JUST VALUE		975,258
NCON VALUE		0
INCOME VALUE		
PREVIOUS YEAR MKT VALUE		950,933

PERMIT NUM	DESCRIPTION	AMT	ISSUED
2000007	SWIM POOL	80,000	01/02/2020
B0516806	SCRN LANAI	3,100	09/01/2005
B0311239	NEW CONSTR	170,460	06/01/2003
R035126	REPAIR/RRF	4,800	06/01/2003

SALES DATA

OFF RECORD Number	DATE	TYPE INST	Q / U	V / I	RSN CD	SALE PRICE
2624/0264	3/06/2023	WD	Q	I	01	1,200,000
GRANTOR: CORNELL VINCENT B & A						
GRANTEE: LOUMEAU JESSICA G &						
2108/0791	3/16/2017	WD	Q	I	02	437,000
GRANTOR: CHURCHILL DAVID A						
GRANTEE: CORNELL VINCENT B &						

BUILDING NOTES

BUILDING DIMENSIONS

BAS=[YR=2003] W4 USP=[YR=2007] N13 W12 S13 E12$ W12
FSP=[YR=2003] N3 W19 S11E18 N8 E1$ W1 S8 W18 N8 W25 S39
FGR=[YR=2003] S3 PTO=[YR=2003] W5 S9 E5 N9 $ S20 E20 N23 W20$
E28 FOP=[YR=2003] S2 E10 N2 W2 N5 W6 S5 W2$ E2 N5 E6 S5 E11
N1 E13 N38 $.

EXTRA FEATURES

LN	OB/XF CODE	DESCRIPTION	BLD	CAP	L	W	UNITS	UT	Adj R	ADJ UNIT PRICE	ORIG COND	YEAR ON	YEAR ACTUAL	Q	% COND	OB/XF MKT VALUE	NOTES
1	0500	FP-PRE FAB	0	100	0	0	1.00	UT	3,500.00	3,500.00	100	2003	2003	3	86	3,010	
2	0855	CONC PAVER	0	100	0	0	1,321.00	SF	10.00	10.00	100	2023	2021	3	99	13,078	
3	0855	CONC PAVER	0	100	0	0	21.00	SF	10.00	10.00	100	2023	2021	3	99	208	
4	1126	CB/STC 8"	0	100	0	0	40.00	SF	8.00	8.00	100	2003	2003	3	82	262	
5	0855	CONC PAVER	0	100	0	0	561.00	SF	10.00	10.00	100	2007	2007	3	87	4,881	
6	0861	POOL GUNIT	0	100	0	0	408.00	SF	85.00	85.00	100	2020	2020	3	90	31,212	
7	0855	CONC PAVER	0	100	0	0	606.00	SF	10.00	10.00	100	2020	2020	3	98	5,939	
8	0871	POOL HTR R	1	100	0	0	1.00	UT	2,000.00	2,000.00	100	2023	2020		86	1,720	

LAND DESCRIPTION

TOTAL OB/XF 60,310

LN	USE CODE	CLS	LAND USE DESCRIPTION	CAP	RD	LOC ZONE	FRONT	DEPTH	TOT LND UTS	UNIT TYPE	DT	DPTH FACT	% COND	TOT ADJ	UNIT PRICE	ADJ UNIT PRICE	LAND VALUE	OTHER ADJUSTMENTS AND NOTES	YEAR	DENSITY	DECL	FRZ	YR	CONSRV
1	000100	C	RES	100		PUD	0.00	0.00	1.00	LT		1.00	1.00	1.00	350,000.00	350,000.00	350,000							

REVIEW DATE 01/12/2024 BY KBA Total Acres: 0.00 Total Land Value: 350,000 Market: 0 Agricultural: 0 Common: 350,000 PRINTED 07/30/2025 BY SYS