LOT 25
IN OR 1122/1442
SEA WINDS PB 6/269

HALL MICHAEL A & KIMBERLY J
96051 SEA WINDS DRIVE
FERNANDINA BEACH, FL 32034

2025

00-00-30-0608-0025-0000

NASSAU COUNTY PROPERTY

BUILDING CHARACTERISTICS

ELEMENT	CD	CONSTRUCTION
Exterior Wall	16	WD FR STUC 100
Roof Structur	03	GABLE/HIP 100
Roof Cover	03	COMP SHNGL 100
Interior Wall	05	DRYWALL 100
Interior Floo	14	CARPET 70
Interior Floo	08	SHT VINYL 30
Air Condition	03	CENTRAL 100
Heating Type	04	AIR DUCTED 100
Bedrooms		4 100
Bathrooms		2 100
Frame	02	WOOD FRAME 100
Stories	1.	1. 100
Units		0 100
Occupancy	00	NONE 100
Quality	06	Quality Level 06
DOR CODE	0100	SINGLE FAMILY
MAP NUM		MKT AREA 02
NEIGHBORHOOD/LOC	2013.00	

AREA TYPE	TOTAL GROSS AREA	PCT OF BASE	YEAR	TOT ADJ AREA	SUBAREA MARKET VALUE
BAS	1,944	100	2003	1,944	282,122
FGR	508	55	2003	279	40,490
FOP	62	30	2003	19	2,757
FSP	158	40	2003	63	9,142
PTO	192	5	2003	10	1,452
TOTALS	2,864			2,315	335,962

MARKET ADJUSTMENTS

TYPE	MDL	EFF. AREA	TOT ADJ PTS	EFF. BASE RATE	REPL. COST NEW	AYB	EYB	ECON	FNCT		NORM	% COND
0900	01	2,315	122.8430	162.15	375,377	2003	2003	0	0	0	10.50	89.50

1 SNGL FAM – 100% - 2004 Heated Area: 1944 HX Base Yr 2004

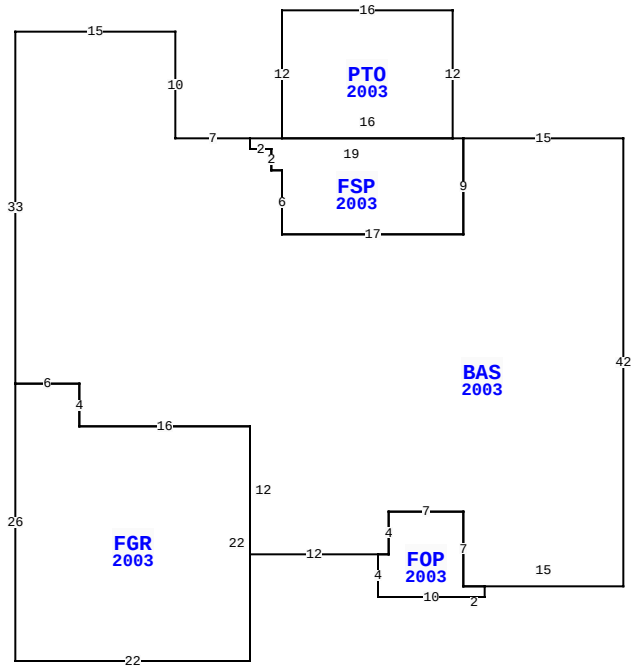

96051 SEA WINDS DR, FERNANDINA BEACH

BLD DATE		LGL DATE	
XF DATE		LAND DATE	05/01/2025 MLU
INC DATE		AG DATE	

VALUATION SUMMARY

VALUATION BY		STANDARD
Tax Group: 8	Tax Dist:	
BUILDING MARKET VALUE		335,962
TOTAL MARKET OB/XF VALUE		6,673
TOTAL LAND VALUE - MARKET		140,000
TOTAL MARKET VALUE		482,635
SOH/AGL Deduction		282,595
ASSESSED VALUE		200,040
TOTAL EXEMPTION VALUE	HX HB	50,722
BASE TAXABLE VALUE		149,318
TOTAL JUST VALUE		482,635
NCON VALUE		0
INCOME VALUE		
PREVIOUS YEAR MKT VALUE		437,776

PERMIT NUM	DESCRIPTION	AMT	ISSUED
B0210460	NEW CONSTR	147,562	11/01/2002
R024565	REPAIR/RRF	3,000	11/01/2002

SALES DATA

OFF RECORD Number	DATE	TYPE INST	Q U	V I	RSN CD	SALE PRICE
1122/1442	3/19/2003	WD	Q	I		203,500
GRANTOR: JAMES R HANNAH INC						
GRANTEE: HALL MICHAEL A & KI						
1088/1349	10/18/2002	WD	U	V	19	34,000
GRANTOR: AMELIA ISLAND LAND DE						
GRANTEE: JAMES R HANNAH INC						

BUILDING NOTES

EXTRA FEATURES

LN	OB/XF CODE	DESCRIPTION	BLD	CAP	L	W	UNITS	UT	Adj R	ADJ UNIT PRICE	ORIG COND	YEAR ON	YEAR ACTUAL	Q	% COND	OB/XF MKT VALUE	NOTES
1	0500	FP-PRE FAB	0	100	0	0	1.00	UT	3,500.00	3,500.00	100	2003	2003	3	86	3,010	
2	0811	CONCRETE B	0	100	0	0	690.00	SF	5.20	5.20	100	2003	2003	3	82	2,942	
3	0855	CONC PAVER	0	100	27	3	81.00	SF	10.00	10.00	100	2009	2009	3	89	721	

BUILDING DIMENSIONS

BAS=[YR=2003] W15 FSP=[YR=2003] W1 PTO=[YR=2003] N12 W16 S12 E16 $ W19 S1 E2 S2 E1 S6 E17 N9 $ S9 W17 N6 W1 N2 W2 N1 W7 N10 W15 S33 FGR=[YR=2003] S26 E22 N22 W16 N4 W6 $ E6 S4 E16 S12 E12 FOP=[YR=2003] S4 E10N1 W2 N7 W7 S4 W1 $ E1 N4 E7 S7 E15 N42 $.

LAND DESCRIPTION

TOTAL OB/XF 6,673

LN	USE CODE	CLS	LAND USE DESCRIPTION	CAP	RD	LOC ZONE	FRONT	DEPTH	TOT LND UTS	UNIT TYPE	DT	DPTH FACT	% COND	TOT ADJ	UNIT PRICE	ADJ UNIT PRICE	LAND VALUE	OTHER ADJUSTMENTS AND NOTES	YEAR	DENSITY	DECL	FRZ	YR	CONSRV
1	000100	C	RES	100		RSF-2	0.00	0.00	1.00	LT		1.00	1.00	1.00	140,000.00	140,000.00	140,000							

REVIEW DATE 01/22/2019 BY DJA Total Acres: 0.00 Total Land Value: 140,000 Market: 0 Agricultural: 0 Common: 140,000 PRINTED 07/30/2025 BY SYS