LOT 8
IN OR 587/498
ESMT AGREEMENT PT OR 766/1726

BRUAL PETER/ROBERSON MIRANDA
8322 SANCTUARY LANE
FERNANDINA BEACH, FL 32034

2025

00-00-30-0603-0008-0000

NASSAU COUNTY PROPERTY

BUILDING CHARACTERISTICS

ELEMENT	CD	CONSTRUCTION
Exterior Wall	17	CB STUCCO 50
Exterior Wall	18	CEMENT BRK 50
Roof Structur	08	IRREGULAR 100
Roof Cover	07	CONC TILE 100
Interior Wall	05	DRYWALL 100
Interior Floo	19	MARBLE 60
Interior Floo	12	HARDWOOD 40
Air Condition	03	CENTRAL 100
Heating Type	04	AIR DUCTED 100
Bedrooms		4 100
Bathrooms		5.5 100
Frame	02	WOOD FRAME 100
Stories	2.	2. 100
Units		0 100
Quality	01	Quality Level 01
DOR CODE	0100	SINGLE FAMILY
MAP NUM		MKT AREA 10
NEIGHBORHOOD/LOC	10005.00	

AREA TYPE	TOTAL GROSS AREA	PCT OF BASE	YEAR	TOT ADJ AREA	SUBAREA MARKET VALUE
BAS	3,111	100	2007	3,111	1,408,334
FBM	663	80	2007	530	239,928
FGR	711	55	2007	391	177,004
FOP	12	30	2007	4	1,811
FOP	40	30	2007	12	5,432
FOP	228	30	2007	68	30,783
FOP	439	30	2007	132	59,755
FOP	811	30	2007	243	110,005
FUS	3,042	100	2007	3,042	1,377,098
STR	73	10	2007	7	3,169
TOTALS	10,139			7,734	3,501,141

MARKET ADJUSTMENTS

TYPE	MDL	EFF. AREA	TOT ADJ PTS	EFF. BASE RATE	REPL. COST NEW	AYB	EYB	ECON	FNCT		NORM	% COND
0900	22	7,734	383.7403	506.54	3,917,580	2007	2007	0	0	0	10.63	89.37

1 SNGL FAM – 0% - 0 Heated Area: 6683 HX Base Yr

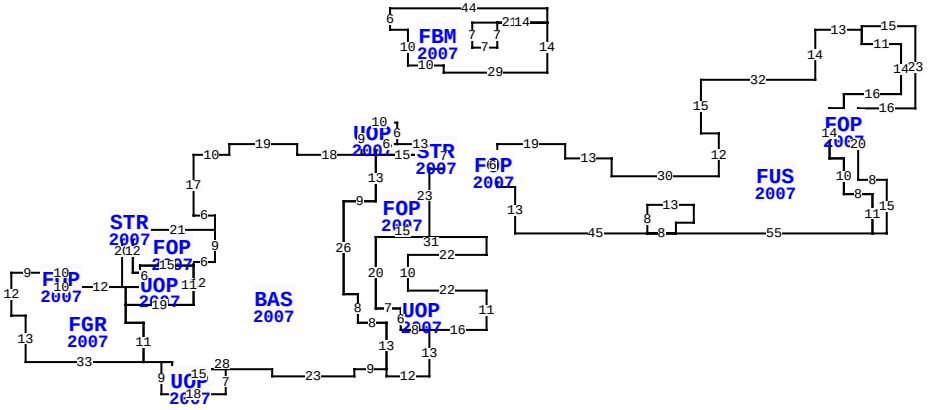

** This building has 15 Sub-Areas

8322 SANCTUARY LN, FERNANDINA BEACH

BLD DATE	02/05/2008 DJ	LGL DATE	
XF DATE		LAND DATE	05/08/2025 MLU
INC DATE		AG DATE	

VALUATION SUMMARY

VALUATION BY	STANDARD
Tax Group: 5	Tax Dist:
BUILDING MARKET VALUE	3,501,141
TOTAL MARKET OB/XF VALUE	68,267
TOTAL LAND VALUE - MARKET	3,500,000
TOTAL MARKET VALUE	7,069,408
SOH/AGL Deduction	0
ASSESSED VALUE	7,069,408
TOTAL EXEMPTION VALUE	0
BASE TAXABLE VALUE	7,069,408
TOTAL JUST VALUE	7,069,408
NCON VALUE	0
INCOME VALUE	
PREVIOUS YEAR MKT VALUE	6,759,501

PERMIT NUM	DESCRIPTION	AMT	ISSUED
SP240011355	SPA TO POOL -	65,000	10/07/2024
240001365	GARAGE/MBA	719,351	02/05/2024
B240001100	INTERIOR DEMO CAB	5,000	01/29/2024
E18127	ELEC OTHER	30,000	10/01/2006
M11940	MECH OTHER	0	08/01/2006
R09507	REPAIR/RRF	110,000	07/01/2006

SALES DATA

OFF RECORD Number	DATE	TYPE INST	Q / U	V / I	RSN CD	SALE PRICE
2421/0962	12/18/2020	WD	Q	I	01	6,400,000
GRANTOR: JADEJA JASWANT & LEEN						
GRANTEE: BRUAL PETER & MIRAN						
0587/0498	1/03/1990	WD	Q	V		355,000
GRANTOR: LEGGIO ANTHONY & S						
GRANTEE: JADEJA JASWANT & L						

BUILDING NOTES

BUILDING DIMENSIONS

STR=[YR=2007] W13 UOP=[YR=2007] N6 W10 S9 BAS=[YR=2007] W18 N3 W19 S3 W10 S17 E6 S4 FOP=[YR=2007] W21 STR=[YR=2007] N4 W5 S20 FGR=[YR=2007] W12 FOP=[YR=2007] N4 W10 S4 E10$ W10 N4 W9 S12 E4 S13 E33 N11 W5 N5 UOP=[YR=2007] E19 N11 W15 S6 W4 S5$ N5 W1$ E5 N4 W2 N12 E2$ W2 S12 E2 N2 E15 N1 E6 N9$ S9 W6 S12 W19 S5 E5 S11 E5 UOP=[YR=2007] S9 E18 N7 W15 N2 W3$ E3 S2 E28 S2 E23 N2 E9 FOP=[YR=2007] S2 E12 N13 UOP=[YR=2007] E16 N11 W22 N10 E22 N5 W31 S20 E7 S6 E8$ W8 N6 W7 N20 E15 N23 W15 S13 W9 S26 E4 S8 E8 S13$ N13 W8 N8 W4 N26 E9 N13 W4$ E4 N3 E6$ W6 S3 E15 S4 E4 N7$ PTR=E15 FUS=[YR=2007] E19 S4 E13 S5 E30 N12 W5 N15 E32 N14 E13 FOP=[YR=2007] N1 E15 S23 W16 S20 E8 S15 W4 N11 W8 N10 W4 N14

EXTRA FEATURES

LN	OB/XF CODE	DESCRIPTION	BLD	CAP	L	W	UNITS	UT	Adj R	ADJ UNIT PRICE	ORIG COND	YEAR ON	YEAR ACTUAL	Q	% COND	OB/XF MKT VALUE	NOTES
1	0500	FP-PRE FAB	0	0	0	0	2.00	UT	3,500.00	3,500.00	100	2007	2007	3	90	6,300	
2	0856	POROUS CC	0	0	0	0	3,594.00	SF	2.50	2.50	100	2007	2007	3	87	7,817	
3	0462	ST/AL FNC	0	0	198	4	792.00	SF	10.00	10.00	100	2007	2007	3	44	3,485	
4	0415	BEACHWALK	0	0	110	5	550.00	SF	5.75	5.75	100	2007	2007	3	27	854	
5	1126	CB/STC 8"	0	0	20	0	60.00	SF	16.00	16.00	100	2007	2007	3	87	835	
6	1126	CB/STC 8"	0	0	26	0	104.00	SF	16.00	16.00	100	2007	2007	3	87	1,448	
7	0861	POOL GUNIT	0	0	0	0	225.00	SF	170.00	170.00	100	2007	2007	3	44	16,830	
8	0840	MARBLE	0	0	0	0	539.00	SF	40.00	40.00	100	2007	2007	3	96	20,698	
9	0410	ELEVATOR	0	0	0	0	1.00	UT	10,000.00	10,000.00	100	2007	2007	3	100	10,000	

LAND DESCRIPTION

TOTAL OB/XF 68,267

LN	USE CODE	CLS	LAND USE DESCRIPTION	CAP	RD	LOC ZONE	FRONT	DEPTH	TOT LND UTS	UNIT TYPE	DT	DPTH FACT	% COND	TOT ADJ	UNIT PRICE	ADJ UNIT PRICE	LAND VALUE	OTHER ADJUSTMENTS AND NOTES	YEAR	DENSITY	DECL	FRZ	YR	CONSRV
1	000120	C	RES OCEAN	0		RSF-1	0.00	0.00	1.00	LT		1.00	1.00	1.00	3,500,000.00	3,500,000.00	3,500,000							

REVIEW DATE 04/04/2024 BY DJ Total Acres: 0.00 Total Land Value: 3,500,000 Market: 0 Agricultural: 0 Common: 3,500,000 PRINTED 07/30/2025 BY SYS