LOT 27
RIVER OAKS OF AMELIA 2 PB6/111

HARRELL ELIZABETH C
196 ROWAN OAK PLACE
FERNANDIAN BEACH, FL 32034

2025

00-00-30-0560-0027-0000

BUILDING CHARACTERISTICS

ELEMENT	CD	CONSTRUCTION
Exterior Wall	10	ABOVE AVG 100
Roof Structur	03	GABLE/HIP 100
Roof Cover	03	COMP SHNGL 100
Interior Wall	05	DRYWALL 100
Interior Floo	11	CLAY TILE 60
Interior Floo	14	CARPET 40
Air Condition	03	CENTRAL 100
Heating Type	04	AIR DUCTED 100
Bedrooms		3 100
Bathrooms		2.5 100
Frame	02	WOOD FRAME 100
Stories	1.	1. 100
Units		0 100
Occupancy	00	NONE 100
Quality	03	Quality Level 03
DOR CODE	0100	SINGLE FAMILY
MAP NUM		MKT AREA 02
NEIGHBORHOOD/LOC	2024.00	

AREA TYPE	TOTAL GROSS AREA	PCT OF BASE	YEAR	TOT ADJ AREA	SUBAREA MARKET VALUE
BAS	2,300	100	2000	2,300	357,536
FGR	668	55	2000	367	57,051
FOP	61	30	2000	18	2,798
FOP	96	30	2000	29	4,508
UOP	9	20	2000	2	311
UOP	152	20	2000	30	4,664
USP	152	30	2000	46	7,151
TOTALS	3,438			2,792	434,017

MARKET ADJUSTMENTS

TYPE	MDL	EFF. AREA	TOT ADJ PTS	EFF. BASE RATE	REPL. COST NEW	AYB	EYB	ECON	FNCT		NORM	% COND
0500	01	2,792	111.1680	175.65	490,415	2000	2000	0	0	0	11.50	88.50

1 SFR CUST – 100% - 2024 Heated Area: 2300 HX Base Yr 2024

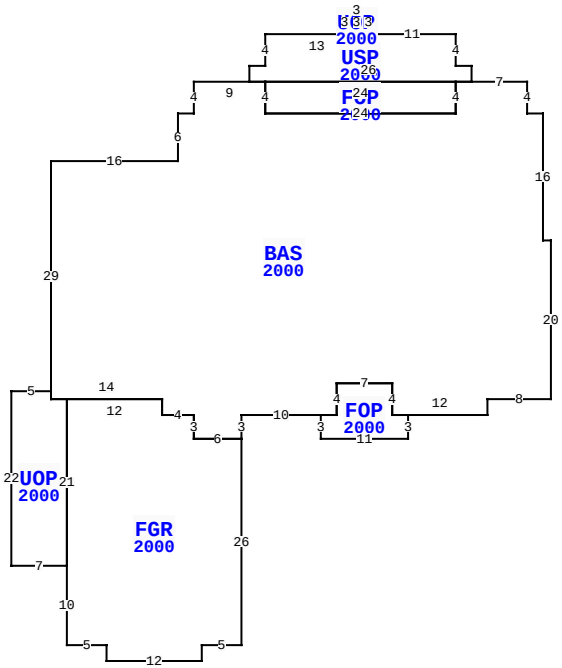

196 ROWAN OAK PL, FERNANDINA BEACH

BLD DATE		LGL DATE	
XF DATE		LAND DATE	04/29/2025 MLU
INC DATE		AG DATE	

NASSAU COUNTY PROPERTY

PAGE 1 of 1 8

VALUATION SUMMARY

VALUATION BY		STANDARD
Tax Group: 8	Tax Dist:	
BUILDING MARKET VALUE		434,017
TOTAL MARKET OB/XF VALUE		4,696
TOTAL LAND VALUE - MARKET		250,000
TOTAL MARKET VALUE		688,713
SOH/AGL Deduction		25,860
ASSESSED VALUE		662,853
TOTAL EXEMPTION VALUE	VP HX HB VX	480,714
BASE TAXABLE VALUE		182,139
TOTAL JUST VALUE		688,713
NCON VALUE		0
INCOME VALUE		
PREVIOUS YEAR MKT VALUE		644,172

PERMIT NUM	DESCRIPTION	AMT	ISSUED
20212568	DEMOLITION	0	03/01/2021
B006818	NEW CONSTR	146,858	02/01/2000

SALES DATA

OFF RECORD Number	DATE	TYPE INST	Q U	V I	RSN CD	SALE PRICE
2676/1199	10/31/2023	WD	Q	I	01	799,900
GRANTOR: STACKPOLE KEVIN & JAC						
GRANTEE: HARRELL ELIZABETH C						
2110/0256	3/28/2017	WD	Q	I	02	360,000
GRANTOR: BULLARD WILLIAM DALE						
GRANTEE: STACKPOLE KEVIN & J						

BUILDING NOTES

BUILDING DIMENSIONS

BAS=[YR=2000] W1 N16 W2 N4 W7 USP=[YR=2000] N2 W2 N4 W11 UOP=[YR=2000] N3 W3 S3 E3 $ W13 S4 W2 S2 E2 FOP=[YR=2000] S4 E24 N4 W24 $ E26 $ W2 S4 W24 N4 W9 S4 W2 S6 W16 S29 UOP=[YR=2000] W5 S22 E7 FGR=[YR=2000] S10 E5 S2 E12 N2 E5 N26 W6 N3 W4 N2 W12 S21 $ N21 W2 N1 $ S1 E14 S2 E4 S3 E6 N3 E10 FOP=[YR=2000] S3 E11 N3 W2 N4 W7 S4 W2 $ E2 N4 E7 S4 E12 N2 E8 N20$. N16 $.

EXTRA FEATURES

LN	OB/XF CODE	DESCRIPTION	BLD	CAP	L	W	UNITS	UT	Adj R	ADJ UNIT PRICE	ORIG COND	YEAR ON	YEAR ACTUAL	Q	% COND	OB/XF MKT VALUE	NOTES
1	0812	CONCRETE C	0	100	0	0	1,450.00	SF	4.00	4.00	100	2000	2000	3	77	4,466	
2	0810	CONCRETE A	0	100	0	0	46.00	SF	6.50	6.50	100	2000	2000	3	77	230	

LAND DESCRIPTION

TOTAL OB/XF 4,696

LN	USE CODE	CLS	LAND USE DESCRIPTION	CAP	RD	LOC ZONE	FRONT	DEPTH	TOT LND UTS	UNIT TYPE	DT	DPTH FACT	% COND	TOT ADJ	UNIT PRICE	ADJ UNIT PRICE	LAND VALUE	OTHER ADJUSTMENTS AND NOTES	YEAR	DENSITY	DECL	FRZ	YR	CONSRV
1	000100	C	RES	100		RG-1	0.00	0.00	1.00	LT		1.00	1.00	1.00	250,000.00	250,000.00	250,000							

REVIEW DATE 10/08/2021 BY RKX Total Acres: 0.00 Total Land Value: 250,000 Market: 0 Agricultural: 0 Common: 250,000 PRINTED 07/30/2025 BY SYS