LOT 17 IN OR 777/1255
RIVER OAKS OF AMELIA PB 5/407

WRIGHT JAN MICHAEL & MONICA H
195 RIVER OAKS DR
FERNANDINA BEACH, FL 32034

2025

00-00-30-0560-0017-0000

BUILDING CHARACTERISTICS

ELEMENT	CD	CONSTRUCTION
Exterior Wall	05	AVERAGE 100
Roof Structur	03	GABLE/HIP 100
Roof Cover	03	COMP SHNGL 100
Interior Wall	05	DRYWALL 100
Interior Floo	11	CLAY TILE 50
Interior Floo	13	LVT/LAMNT 50
Air Condition	03	CENTRAL 100
Heating Type	04	AIR DUCTED 100
Bedrooms		3 100
Bathrooms		2.5 100
Frame	02	WOOD FRAME 100
Stories	2.	2. 100
Units		0 100
Occupancy	00	NONE 100
Quality	03	Quality Level 03
DOR CODE	0100	SINGLE FAMILY
MAP NUM		MKT AREA 02
NEIGHBORHOOD/LOC	2024.00	

AREA TYPE	TOTAL GROSS AREA	PCT OF BASE	YEAR	TOT ADJ AREA	SUBAREA MARKET VALUE
BAS	1,346	100	1996	1,346	188,163
FGR	462	55	1996	254	35,507
FOP	26	30	1996	8	1,119
FSP	650	40	2008	260	36,347
FUS	1,430	100	1996	1,430	199,905
PTO	26	5	1996	1	140
PTO	480	5	2008	24	3,355
STR	12	10	1996	1	140
TOTALS	4,432			3,324	464,675

MARKET ADJUSTMENTS

TYPE	MDL	EFF. AREA	TOT ADJ PTS	EFF. BASE RATE	REPL. COST NEW	AYB	EYB	ECON	FNCT		NORM	% COND
0500	01	3,324	102.5800	162.08	538,754	1996	1996	0	0	0	13.75	86.25

1 SFR CUST – 100% - 1997 Heated Area: 2776 HX Base Yr 1997

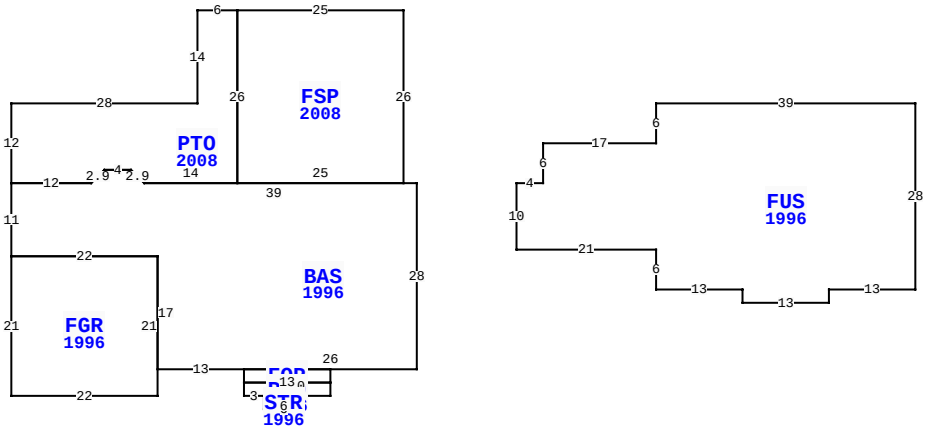

195 RIVER OAKS DR, FERNANDINA BEACH

BLD DATE		LGL DATE	
XF DATE		LAND DATE	04/29/2025 MLU
INC DATE		AG DATE	

NASSAU COUNTY PROPERTY

PAGE 1 of 1 8

VALUATION SUMMARY

VALUATION BY		STANDARD
Tax Group: 8	Tax Dist:	
BUILDING MARKET VALUE		464,675
TOTAL MARKET OB/XF VALUE		6,655
TOTAL LAND VALUE - MARKET		250,000
TOTAL MARKET VALUE		721,330
SOH/AGL Deduction		435,063
ASSESSED VALUE		286,267
TOTAL EXEMPTION VALUE	HX HB	50,722
BASE TAXABLE VALUE		235,545
TOTAL JUST VALUE		721,330
NCON VALUE		0
INCOME VALUE		
PREVIOUS YEAR MKT VALUE		675,540

PERMIT NUM	DESCRIPTION	AMT	ISSUED
B21450	SCRN ENCLOSURE	7,000	05/01/2008
R11280	REPAIR/RRF	500	05/01/2008
B9602715	NEW CONSTR	106,002	03/01/1996

SALES DATA

OFF RECORD Number	DATE	TYPE INST	Q / U	V / I	RSN CD	SALE PRICE
0777/1255	11/22/1996	WD	Q	I		200,000

GRANTOR: AMELIA ISLAND BUILDIN

GRANTEE: WRIGHT JAN MICHAEL

BUILDING NOTES

BUILDING DIMENSIONS

BAS=[YR=1996] W2 FSP=[YR=2008] N26 W25 PTO=[YR=2008] W6 S14 W28 S12 E12 R2 U2 E4 D2 R2 E14 N26$ S26 E25$ W39 L2 U2 W4 D2 L2 W12 S11 FGR=[YR=1996] S21 E22 N21 W22$ E22 S17 E13 FOP=[YR=1996] S2 PTO=[YR=1996] S2 E3 STR=[YR=1996] S2 E6 N2 W6$ E10 N2 W13$ E13 N2 W13$ E26 N28$ PTR=E15 FUS=[YR=1996] E4 N6 E17N6 E39 S28 W13 S2 W13 N2 W13 N6 W21 N10$ W15$.

EXTRA FEATURES

L N	OB/XF CODE	DESCRIPTION	BLD	CAP	L	W	UNITS	UT	Adj R	ADJ UNIT PRICE	ORIG COND	YEAR ON	YEAR ACTUAL	Q	% COND	OB/XF MKT VALUE	NOTES
1	0504	FP-ELECTRI	0	100	0	0	1.00	UT	2,000.00	2,000.00	100	1996	1996	3	77	1,540	
2	0812	CONCRETE C	0	100	0	0	1,344.00	SF	4.00	4.00	100	1996	1996	3	70	3,763	
3	0810	CONCRETE A	0	100	0	0	244.00	SF	6.50	6.50	100	1996	1996	3	70	1,110	
4	0475	VF 4 SBPL	0	100	0	0	18.00	LF	14.00	14.00	100	2007	2007	3	69	174	
5	0469	VF LATTIC	0	100	0	0	18.00	SF	5.50	5.50	100	2007	2007	3	69	68	

LAND DESCRIPTION

TOTAL OB/XF 6,655

L N	USE CODE	CLS	LAND USE DESCRIPTION	CAP	R D	LOC ZONE	FRONT	DEPTH	TOT LND UTS	UNIT TYPE	D T	DPTH FACT	% COND	TOT ADJ	UNIT PRICE	ADJ UNIT PRICE	LAND VALUE	OTHER ADJUSTMENTS AND NOTES	YEAR	DENSITY	DECL	FRZ	YR	CONSRV
1	000100	C	RES	100		RG-1	0.00	0.00	1.00	LT		1.00	1.00	1.00	250,000.00	250,000.00	250,000							

REVIEW DATE 05/14/2019 BY DJA Total Acres: 0.00 Total Land Value: 250,000 Market: 0 Agricultural: 0 Common: 250,000 PRINTED 07/30/2025 BY SYS