LOT 11 &
PT ABNDED R/W RES# 97-155
IN OR 2136/1395

PEREZ SARAH S & ANTHONY S
5355 FIRST COAST HWY
FERNANDINA BEACH, FL 32034

2025

00-00-30-0560-0011-0000

BUILDING CHARACTERISTICS

ELEMENT	CD	CONSTRUCTION
Exterior Wall	10	ABOVE AVG 70
Exterior Wall	14	WD SHINGLE 30
Roof Structur	08	IRREGULAR 100
Roof Cover	03	COMP SHNGL 100
Interior Wall	05	DRYWALL 100
Interior Floo	12	HARDWOOD 80
Interior Floo	11	CLAY TILE 20
Air Condition	03	CENTRAL 100
Heating Type	04	AIR DUCTED 100
Bedrooms		4 100
Bathrooms		4.5 100
Frame	02	WOOD FRAME 100
Stories	2.	2. 100
Units		0 100
Quality	04	Quality Level 04
DOR CODE	0100	SINGLE FAMILY
MAP NUM		MKT AREA 03
NEIGHBORHOOD/LOC	3035.00	

AREA TYPE	TOTAL GROSS AREA	PCT OF BASE	YEAR	TOT ADJ AREA	SUBAREA MARKET VALUE
BAS	3,522	100	2000	3,522	720,729
FGR	838	55	2000	461	94,337
FOP	84	30	2000	25	5,116
FOP	144	30	2000	43	8,800
FOP	161	30	2000	48	9,823
FOP	270	30	2000	81	16,575
FUS	867	100	2000	867	177,420
PTO	30	5	2000	2	409
PTO	30	5	2000	2	409
PTO	132	5	2000	7	1,432
TOTALS	6,595			5,161	1,056,128

MARKET ADJUSTMENTS

TYPE	MDL	EFF. AREA	TOT ADJ PTS	EFF. BASE RATE	REPL. COST NEW	AYB	EYB	ECON	FNCT		NORM	% COND
0500	11	5,161	146.5926	231.62	1,195,391	2000	2000	0	0	0	11.65	88.35

1 SFR CUST – 100% - 2019 Heated Area: 4389 HX Base Yr 2019

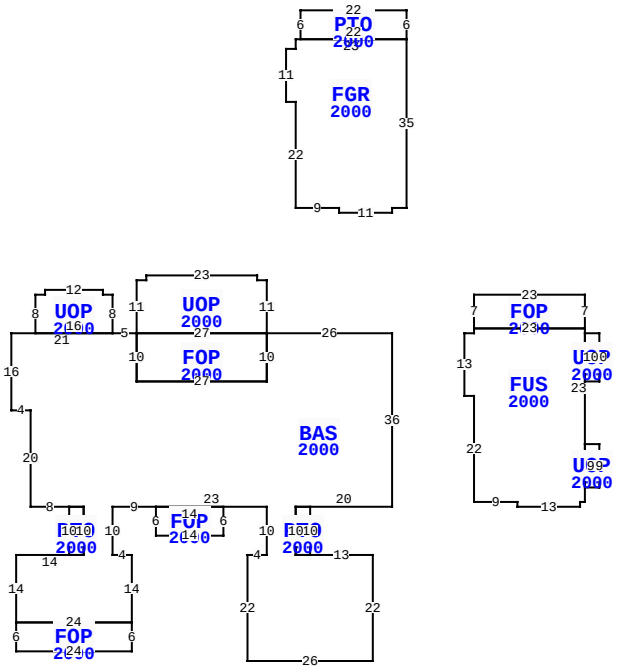

** This building has 14 Sub-Areas

5355 FIRST COAST HWY, FERNANDINA BEACH

BLD DATE		LGL DATE	
XF DATE		LAND DATE	
INC DATE		AG DATE	

NASSAU COUNTY PROPERTY

PAGE 1 of 1 8

VALUATION SUMMARY

VALUATION BY		STANDARD
Tax Group: 8	Tax Dist:	
BUILDING MARKET VALUE		1,056,128
TOTAL MARKET OB/XF VALUE		59,275
TOTAL LAND VALUE - MARKET		1,171,500
TOTAL MARKET VALUE		2,286,903
SOH/AGL Deduction		606,885
ASSESSED VALUE		1,680,018
TOTAL EXEMPTION VALUE	HX HB	50,722
BASE TAXABLE VALUE		1,629,296
TOTAL JUST VALUE		2,286,903
NCON VALUE		0
INCOME VALUE		
PREVIOUS YEAR MKT VALUE		2,242,805

PERMIT NUM	DESCRIPTION	AMT	ISSUED
B1806843	REMODEL	85,000	07/05/2018
B18574	ADDITION	13,840	09/01/2006
B0617890	REMODEL	12,000	06/01/2006
B0617891	SWIM POOL	32,000	06/01/2006
B0007693	SWIM POOL	17,000	11/01/2000
B006950	NEW CONSTR	520,000	03/01/2000

SALES DATA

OFF RECORD Number	DATE	TYPE INST	Q / U	V / I	RSN CD	SALE PRICE
2136/1395	7/20/2017	WD	Q	I	02	1,700,000
GRANTOR: HOLZ JAMES M & PEGGY						
GRANTEE: PEREZ SARAH S & ANT						
1285/0880	1/04/2005	WD	U	I	21	1,800,000
GRANTOR: LASSITER DORIS P						
GRANTEE: HOLZ JAMES M & PEGG						

BUILDING NOTES

BUILDING DIMENSIONS

BAS=[YR=2000] W26 UOP=[YR=2000] N11 W2 N1 W23 S1 W2 S11 FOP=[YR=2000] S10 E27 N10 W27 $ E27 $ S10 W27 N10 W5 UOP=[YR=2000] N8 W2 N1 W12 S1 W2 S8 E16 $ W21 S16 E4 S20 E8 PTO=[YR=2000] S10 E3 N10 W3 $ E3 S10 W14 S14 FOP=[YR=2000] S6 E24 N6 W24 $ E24 N14 W4 N10 E9 FOP=[YR=2000] S6 E14 N6 W14 $ E23 S10 W4 S22 E26 N22 W13 PTO=[YR=2000] N10 W3 S10 E3 $ W3 N10 E20 N36 $ PTR= E15 FUS=[YR=2000] E2 N1 FOP=[YR=2000] N7 E23 S7 W23 $ E23 S1 UOP=[YR=2000] E3 S10 W3 N10 $ S23 UOP=[YR=2000] E3 S9 W3 N9 $ S12 W1 S1 W13 N1 W9 N22 W2 N13 $ W15 $ PTR= N25 FGR=[YR=2000] N1 E3 N35 PTO=[YR=2000] N6 W22 S6 E22 $ W23 S2 W2 S11 E2 S22 E9 S1 E11 $ S25 $.

EXTRA FEATURES

LN	OB/XF CODE	DESCRIPTION	BLD	CAP	L	W	UNITS	UT	Adj R	ADJ UNIT PRICE	ORIG COND	YEAR ON	YEAR ACTUAL	Q	% COND	OB/XF MKT VALUE	NOTES
1	0500	FP-PRE FAB	0	100	0	0	1.00	UT	3,500.00	3,500.00	100	2000	2000	3	83	2,905	
2	0812	CONCRETE C	0	100	0	0	2,357.00	SF	4.00	4.00	100	2000	2000	3	77	7,260	
3	1126	CB/STC 8"	0	100	0	0	362.00	SF	8.00	8.00	100	2000	2000	3	77	2,230	
4	1075	TRELLIS G	0	100	0	0	151.00	SF	35.00	35.00	100	2000	2000	3	27	1,427	
5	0835	QUARY TILE	0	100	0	0	264.00	SF	10.00	10.00	100	2000	2000	3	77	2,033	
6	0861	POOL GUNIT	0	100	0	0	512.00	SF	85.00	85.00	100	2007	2007	3	44	19,149	
7	0835	QUARY TILE	0	100	0	0	1,100.00	SF	10.00	10.00	100	2007	2007	3	87	9,570	
8	0911	SCRN RM A	0	100	0	0	1,612.00	SF	17.50	17.50	100	2007	2007	3	27	7,617	
9	0462	ST/AL FNC	0	100	83	5	415.00	SF	10.00	10.00	100	2007	2007	3	44	1,826	
10	0803	ASPHALT C	0	100	0	0	4,533.00	SF	2.00	2.00	100	2007	2007	3	58	5,258	

TOTAL OB/XF 59,275

LAND DESCRIPTION

LN	USE CODE	CLS	LAND USE DESCRIPTION	CAP	RD	LOC ZONE	FRONT	DEPTH	TOT LND UTS	UNIT TYPE	DT	DPTH FACT	% COND	TOT ADJ	UNIT PRICE	ADJ UNIT PRICE	LAND VALUE	OTHER ADJUSTMENTS AND NOTES	YEAR	DENSITY	DECL	FRZ	YR	CONSRV
1	000116	C	RES MARSH	100		RSF-	1142.00	585.00	142.00	FF		1.00	1.00	1.10	7,500.00	8,250.00	1,171,500							

REVIEW DATE 01/31/2024 BY KBA Total Acres: 0.00 Total Land Value: 1,171,500 Market: 0 Agricultural: 0 Common: 1,171,500 PRINTED 07/30/2025 BY SYS