LOT 23
PLANTATION POINT PB 5/269

TAYLOR WILLIAM M L/E & HUGHES JANET L/E/
1237 HARRISON POINT TRAIL
FERNANDINA BEACH, FL 32034

2025

00-00-30-0518-0023-0000

NASSAU COUNTY PROPERTY

BUILDING CHARACTERISTICS

ELEMENT	CD	CONSTRUCTION
Exterior Wall	10	ABOVE AVG 100
Roof Structur	03	GABLE/HIP 100
Roof Cover	03	COMP SHNGL 100
Interior Wall	05	DRYWALL 100
Interior Floo	11	CLAY TILE 70
Interior Floo	14	CARPET 30
Air Condition	03	CENTRAL 100
Heating Type	04	AIR DUCTED 100
Bedrooms		3 100
Bathrooms		2 100
Frame	02	WOOD FRAME 100
Stories	1.	1. 100
Units		0 100
Occupancy	00	NONE 100
Quality	06	Quality Level 06

DOR CODE 0100 SINGLE FAMILY
MAP NUM | MKT AREA 03
NEIGHBORHOOD/LOC 3036.00

AREA TYPE	TOTAL GROSS AREA	PCT OF BASE	YEAR	TOT ADJ AREA	SUBAREA MARKET VALUE
BAS	2,180	100	2000	2,180	401,760
FGR	462	55	2000	254	46,810
FOP	36	30	2000	11	2,027
FSP	636	40	2000	254	46,810
UOP	66	20	2000	13	2,396
TOTALS	3,380			2,712	499,803

MARKET ADJUSTMENTS

TYPE	MDL	EFF. AREA	TOT ADJ PTS	EFF. BASE RATE	REPL. COST NEW	AYB	EYB	ECON	FNCT		NORM	% COND
0500	01	2,712	128.1744	202.52	549,234	2000	2005	0	0	0	9.00	91.00

1 SFR CUST – 100% - 2006 Heated Area: 2180 HX Base Yr 2006

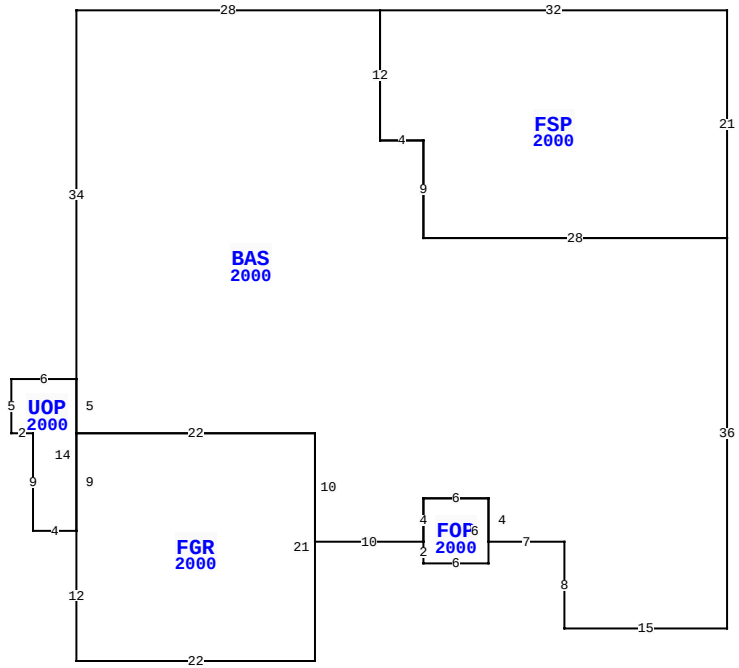

1237 HARRISON POINT TRL, FERNANDINA BEACH

BLD DATE		LGL DATE	
XF DATE		LAND DATE	
INC DATE		AG DATE	

NASSAU COUNTY PROPERTY — VALUATION SUMMARY

VALUATION BY		STANDARD
Tax Group: 8	Tax Dist:	
BUILDING MARKET VALUE		499,803
TOTAL MARKET OB/XF VALUE		15,576
TOTAL LAND VALUE - MARKET		350,000
TOTAL MARKET VALUE		865,379
SOH/AGL Deduction		517,585
ASSESSED VALUE		347,794
TOTAL EXEMPTION VALUE	HX HB	50,722
BASE TAXABLE VALUE		297,072
TOTAL JUST VALUE		865,379
NCON VALUE		0
INCOME VALUE		
PREVIOUS YEAR MKT VALUE		842,802

PERMIT NUM	DESCRIPTION	AMT	ISSUED
20213058	REPAIR/RRF	0	03/01/2021
B006971	NEW CONSTR	110,000	03/01/2000

SALES DATA

OFF RECORD Number	DATE	TYPE INST	Q U	V I	RSN CD	SALE PRICE
2272/0754	3/25/2019	QC	U	I	11	100
GRANTOR: TAYLOR WILLIAM M & JA						
GRANTEE: WILLIAM M TAYLOR TR						
1318/0776	5/19/2005	WD	Q	I		500,000
GRANTOR: CAVANAUGH RUSSELL D &						
GRANTEE: TAYLOR WILLIAM M &						

BUILDING NOTES

BUILDING DIMENSIONS

FSP=[YR=2000] W32 BAS=[YR=2000] W28 S34 UOP=[YR=2000] W6 S5 E2 S9 E4 FGR=[YR=2000] S12 E22 N21 W22 S9 $ N14$ S5 E22 S10 E10 FOP=[YR=2000] S2 E6 N6 W6 S4 $ N4 E6 S4 E7 S8 E15 N36 W28 N9 W4 N12 $ S12 E4 S9 E28 N21 $.

EXTRA FEATURES

LN	OB/XF CODE	DESCRIPTION	BLD	CAP	L	W	UNITS	UT	Adj R	ADJ UNIT PRICE	ORIG COND	YEAR ON	YEAR ACTUAL	Q	% COND	OB/XF MKT VALUE	NOTES
1	0500	FP-PRE FAB	0	100	0	0	1.00	UT	3,500.00	3,500.00	100	2000	2000	3	83	2,905	
2	0858	SCULP CONC	0	100	0	0	158.00	SF	13.00	13.00	100	2000	2000	3	93	1,910	
3	0858	SCULP CONC	0	100	0	0	629.00	SF	13.00	13.00	100	2000	2000	3	93	7,605	
4	0858	SCULP CONC	0	100	0	0	369.00	SF	9.10	9.10	100	2001	2001	3	94	3,156	

LAND DESCRIPTION

TOTAL OB/XF 15,576

LN	USE CODE	CLS	LAND USE DESCRIPTION	CAP	RD	LOC ZONE	FRONT	DEPTH	TOT LND UTS	UNIT TYPE	DT	DPTH FACT	% COND	TOT ADJ	UNIT PRICE	ADJ UNIT PRICE	LAND VALUE	OTHER ADJUSTMENTS AND NOTES	YEAR	DENSITY	DECL	FRZ	YR	CONSRV
1	000100	C	RES	100	0003	RSF-1	0.00	0.00	1.00	UT		1.00	1.00	1.00	350,000.00	350,000.00	350,000							

REVIEW DATE 10/11/2021 BY RKA Total Acres: 0.00 Total Land Value: 350,000 Market: 0 Agricultural: 0 Common: 350,000 PRINTED 07/30/2025 BY SYS