LOT 4
IN OR 798/1573
PLANTATION POINT PB 5/269

TINMAN SCOTT A & MARY S
1388 HARRISON POINT TRAIL
FERNANDINA BEACH, FL 32034

**2025**

**00-00-30-0518-0004-0000**

## BUILDING CHARACTERISTICS

| ELEMENT | CD | CONSTRUCTION |
|---|---|---|
| Exterior Wall | 16 | WD FR STUC 100 |
| Roof Structur | 03 | GABLE/HIP 100 |
| Roof Cover | 03 | COMP SHNGL 100 |
| Interior Wall | 05 | DRYWALL 100 |
| Interior Floo | 12 | HARDWOOD 50 |
| Interior Floo | 14 | CARPET 50 |
| Air Condition | 03 | CENTRAL 100 |
| Heating Type | 04 | AIR DUCTED 100 |
| Bedrooms | | 4 100 |
| Bathrooms | | 2 100 |
| Frame | 02 | WOOD FRAME 100 |
| Stories | 1. | 1. 100 |
| Units | | 0 100 |
| Occupancy | 00 | NONE 100 |
| Quality | 06 | Quality Level 06 |
| DOR CODE | 0100 | SINGLE FAMILY |
| MAP NUM | | MKT AREA 03 |
| NEIGHBORHOOD/LOC | 3036.00 | |

| AREA TYPE | TOTAL GROSS AREA | PCT OF BASE | YEAR | TOT ADJ AREA | SUBAREA MARKET VALUE |
|---|---|---|---|---|---|
| BAS | 2,161 | 100 | 1993 | 2,161 | 348,775 |
| FGR | 484 | 55 | 1993 | 266 | 42,931 |
| FOP | 62 | 30 | 1993 | 19 | 3,067 |
| FOP | 204 | 30 | 1993 | 61 | 9,845 |
| TOTALS | 2,911 | | | 2,507 | 404,617 |

## MARKET ADJUSTMENTS

| TYPE | MDL | EFF. AREA | TOT ADJ PTS | EFF. BASE RATE | REPL. COST NEW | AYB | EYB | ECON | FNCT | | NORM | % COND |
|---|---|---|---|---|---|---|---|---|---|---|---|---|
| 0500 | 01 | 2,507 | 120.8880 | 191.00 | 478,837 | 1993 | 1993 | 0 | 0 | 0 | 15.50 | 84.50 |

1 SFR CUST – 100% - 1998 Heated Area: 2161 HX Base Yr 1998

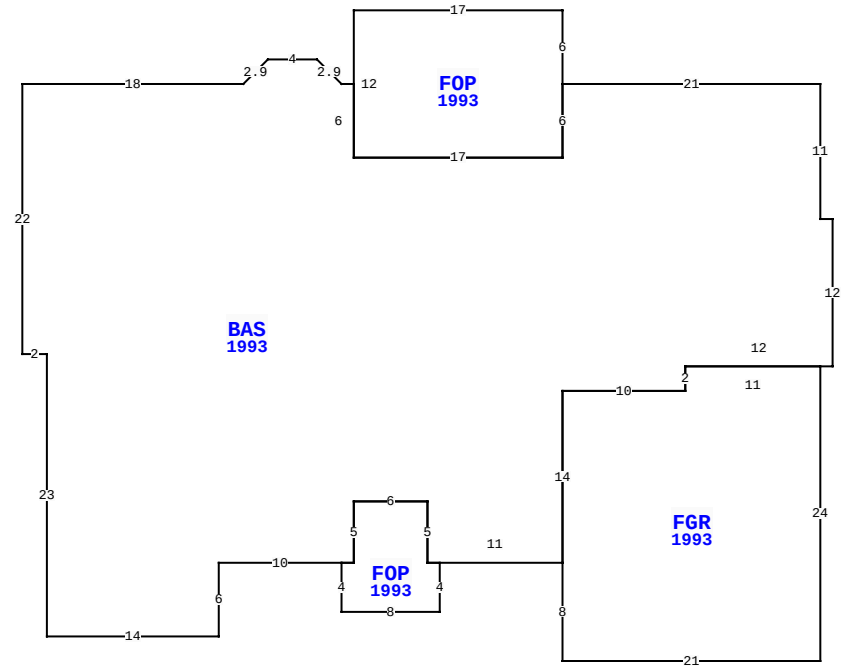


1388 HARRISON POINT TRL, FERNANDINA BEACH

| | | | |
|---|---|---|---|
| BLD DATE | | LGL DATE | |
| XF DATE | | LAND DATE | |
| INC DATE | | AG DATE | |

## NASSAU COUNTY PROPERTY

PAGE 1 of 1 8

### VALUATION SUMMARY

| | | |
|---|---|---|
| VALUATION BY | | STANDARD |
| Tax Group: 8 | Tax Dist: | |
| BUILDING MARKET VALUE | | 404,617 |
| TOTAL MARKET OB/XF VALUE | | 64,027 |
| TOTAL LAND VALUE - MARKET | | 350,000 |
| TOTAL MARKET VALUE | | 818,644 |
| SOH/AGL Deduction | | 540,755 |
| ASSESSED VALUE | | 277,889 |
| TOTAL EXEMPTION VALUE | HX HB | 50,722 |
| BASE TAXABLE VALUE | | 227,167 |
| TOTAL JUST VALUE | | 818,644 |
| NCON VALUE | | 0 |
| INCOME VALUE | | |
| PREVIOUS YEAR MKT VALUE | | 802,424 |

| PERMIT NUM | DESCRIPTION | AMT | ISSUED |
|---|---|---|---|
| 17010938 | SCRNENCL | 21,557 | 12/08/2017 |
| 17001038 | SWIM POOL | 42,000 | 03/01/2017 |
| B01059 | ADDITION | 1,734 | 05/01/1994 |
| 8625 | NEW CONSTR | 95,155 | 01/21/1993 |

## SALES DATA

| OFF RECORD Number | DATE | TYPE INST | Q / U | V / I | RSN CD | SALE PRICE |
|---|---|---|---|---|---|---|
| 0798/1573 | 7/08/1997 | WD | Q | I | | 170,500 |
| GRANTOR: BRIDWELL CRAIG S & SU | | | | | | |
| GRANTEE: TINMAN SCOTT A & MA | | | | | | |
| 0680/0167 | 4/30/1993 | WD | Q | I | | 141,100 |
| GRANTOR: HEAD STEVE | | | | | | |
| GRANTEE: BRIDWELL CRAIG & S | | | | | | |

## BUILDING NOTES

## BUILDING DIMENSIONS

BAS=[YR=1993] W21 FOP=[YR=1993] N6 W17 S12 E17 N6$ S6 W17 N6 W1 U2 L2 W4 D2 L2 W18 S22 E2 S23 E14 N6 E10 FOP=[YR=1993] S4 E8 N4 W1N5 W6 S5 W1$ E1 N5 E6 S5 E11 FGR=[YR=1993] S8 E21 N24 W11 S2 W10 S14$ N14 E10 N2 E12 N12 W1 N11 $.

## EXTRA FEATURES

| LN | OB/XF CODE | DESCRIPTION | BLD | CAP | L | W | UNITS | UT | Adj R | ADJ UNIT PRICE | ORIG COND | YEAR ON | YEAR ACTUAL | Q | % COND | OB/XF MKT VALUE | NOTES |
|---|---|---|---|---|---|---|---|---|---|---|---|---|---|---|---|---|---|
| 1 | 0861 | POOL GUNIT | 0 | 100 | 0 | 0 | 408.00 | SF | 85.00 | 85.00 | 100 | 2017 | 2017 | 3 | 81 | 28,091 | |
| 2 | 0911 | SCRN RM A | 0 | 100 | 0 | 0 | 945.00 | SF | 17.50 | 17.50 | 100 | 2017 | 2017 | 3 | 74 | 12,238 | |
| 3 | 0855 | CONC PAVER | 0 | 100 | 0 | 0 | 537.00 | SF | 10.00 | 10.00 | 100 | 2017 | 2017 | 3 | 96 | 5,155 | |
| 4 | 0855 | CONC PAVER | 0 | 100 | 0 | 0 | 96.00 | SF | 10.00 | 10.00 | 100 | 2017 | 2017 | 3 | 96 | 922 | |
| 5 | 0855 | CONC PAVER | 0 | 100 | 0 | 0 | 928.00 | SF | 10.00 | 10.00 | 100 | 2017 | 2017 | 3 | 96 | 8,909 | |
| 6 | 0500 | FP-PRE FAB | 0 | 100 | 0 | 0 | 1.00 | UT | 3,500.00 | 3,500.00 | 100 | 1993 | 1993 | 3 | 72 | 2,520 | |
| 7 | 0855 | CONC PAVER | 0 | 100 | 0 | 0 | 240.00 | SF | 10.00 | 10.00 | 100 | 2017 | 2017 | 3 | 96 | 2,304 | |
| 8 | 0855 | CONC PAVER | 0 | 100 | 0 | 0 | 405.00 | SF | 10.00 | 10.00 | 100 | 2017 | 2017 | 3 | 96 | 3,888 | |

## LAND DESCRIPTION

TOTAL OB/XF 64,027

| LN | USE CODE | CLS | LAND USE DESCRIPTION | CAP | RD | LOC ZONE | FRONT | DEPTH | TOT LND UTS | UNIT TYPE | DT | DPTH FACT | % COND | TOT ADJ | UNIT PRICE | ADJ UNIT PRICE | LAND VALUE | OTHER ADJUSTMENTS AND NOTES | YEAR | DENSITY | DECL | FRZ | YR | CONSRV |
|---|---|---|---|---|---|---|---|---|---|---|---|---|---|---|---|---|---|---|---|---|---|---|---|---|
| 1 | 000100 | C | RES | 100 | 0003 | RSF-1 | 0.00 | 0.00 | 1.00 | UT | | 1.00 | 1.00 | 1.00 | 350,000.00 | 350,000.00 | 350,000 | | | | | | | |

REVIEW DATE 03/14/2024 BY KBA Total Acres: 0.00 Total Land Value: 350,000 Market: 0 Agricultural: 0 Common: 350,000 PRINTED 07/30/2025 BY SYS