PT OF LOT 9
IN OR 2212/1942
PINE DALE SUB PBK 3/53

HEMBACH GRANT J & STEPHANIE A
2965 PINEDALE ROAD
FERNANDINA BEACH, FL 32034

2025

00-00-30-0500-0009-0010

NASSAU COUNTY PROPERTY

BUILDING CHARACTERISTICS

ELEMENT	CD	CONSTRUCTION
Exterior Wall	10	ABOVE AVG 100
Roof Structur	08	IRREGULAR 100
Roof Cover	03	COMP SHNGL 100
Interior Wall	05	DRYWALL 100
Interior Floo	14	CARPET 60
Interior Floo	12	HARDWOOD 40
Air Condition	03	CENTRAL 100
Heating Type	04	AIR DUCTED 100
Bedrooms		4 100
Bathrooms		3 100
Frame	02	WOOD FRAME 100
Stories	2.	2. 100
Units		0 100
Occupancy	00	NONE 100
Quality	04	Quality Level 04
DOR CODE	0100	SINGLE FAMILY
MAP NUM		MKT AREA 02
NEIGHBORHOOD/LOC	2021.00	

AREA TYPE	TOTAL GROSS AREA	PCT OF BASE	YEAR	TOT ADJ AREA	SUBAREA MARKET VALUE
BAS	1,269	100	2007	1,269	171,876
FGR	481	55	2007	265	35,892
FOP	186	30	2007	56	7,584
FSP	190	40	2012	76	10,294
FUS	1,280	100	2007	1,280	173,367
PTO	16	5	2007	1	135
TOTALS	3,422			2,947	399,148

MARKET ADJUSTMENTS

TYPE	MDL	EFF. AREA	TOT ADJ PTS	EFF. BASE RATE	REPL. COST NEW	AYB	EYB	ECON	FNCT		NORM	% COND
0900	01	2,947	111.5310	147.22	433,857	2007	2007	0	0	0	8.00	92.00

1 SNGL FAM – 100% - 2020 Heated Area: 2549 HX Base Yr 2020

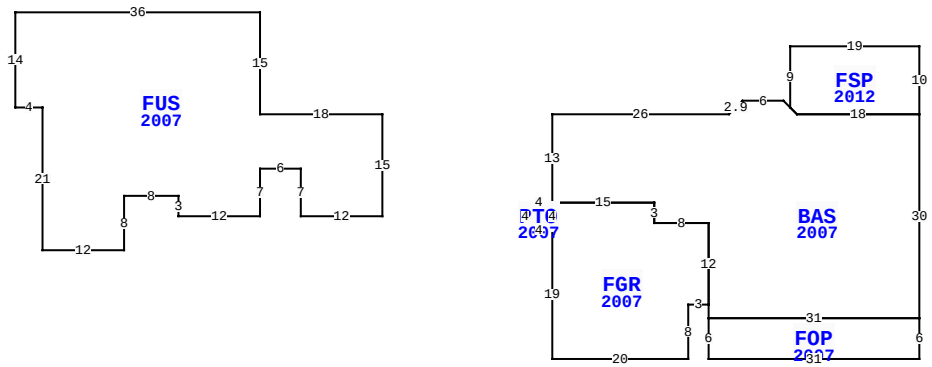

BLD DATE	10/16/2007 KK
XF DATE	
INC DATE	
LGL DATE	
LAND DATE	04/29/2025 MLU
AG DATE	

2965 PINEDALE RD, FERNANDINA BEACH

VALUATION SUMMARY

VALUATION BY		STANDARD
Tax Group: 8	Tax Dist:	
BUILDING MARKET VALUE		399,148
TOTAL MARKET OB/XF VALUE		6,938
TOTAL LAND VALUE - MARKET		159,705
TOTAL MARKET VALUE		565,791
SOH/AGL Deduction		282,255
ASSESSED VALUE		283,536
TOTAL EXEMPTION VALUE	HX HB	50,722
BASE TAXABLE VALUE		232,814
TOTAL JUST VALUE		565,791
NCON VALUE		0
INCOME VALUE		
PREVIOUS YEAR MKT VALUE		539,300

PERMIT NUM	DESCRIPTION	AMT	ISSUED

SALES DATA

OFF RECORD Number	DATE	TYPE INST	Q / U	V / I	RSN CD	SALE PRICE
2212/1942	7/23/2018	WD	Q	I	01	413,500
GRANTOR: BYRD PHILLIP T & CECI						
GRANTEE: HEMBACH GRANT J & S						
1509/0765	7/02/2007	WD	Q	I		392,000
GRANTOR: DARBY MICHAEL L & JAC						
GRANTEE: BYRD PHILLIP T & CE						

BUILDING NOTES

BUILDING DIMENSIONS

BAS=[YR=2007] E26 U2 R2 E6 D1 R1 FSP=[YR=2012] N9 E19 S10 W18 U1 L1 $ R1 D1 E18 S30 FOP=[YR=2007] S6 W31 N6 E31$ W31 N2 FGR=[YR=2007] W3 S8 W20 N19 PTO=[YR=2007] W4 N4 E4 S4$ N4 E15 S3 E8 S12$ N12 W8 N3 W15 N13$ PTR=W25 FUS=[YR=2007] W18 N15 W36 S14 E4 S21 E12 N8 E8 S3 E12 N7 E6 S7 E12 N15$ E25$.

EXTRA FEATURES

LN	OB/XF CODE	DESCRIPTION	BLD	CAP	L	W	UNITS	UT	Adj R	ADJ UNIT PRICE	ORIG COND	YEAR ON	YEAR ACTUAL	Q	% COND	OB/XF MKT VALUE	NOTES
1	0940	SHEDS/PORT	0	100	14	10	140.00	SF	30.00	30.00	100	2007	2007	3	27	1,134	
2	0812	CONCRETE C	0	100	0	0	1,502.00	SF	4.00	4.00	100	2007	2007	3	87	5,227	
3	0810	CONCRETE A	0	100	0	0	102.00	SF	6.50	6.50	100	2007	2007	3	87	577	

LAND DESCRIPTION

TOTAL OB/XF 6,938

LN	USE CODE	CLS	LAND USE DESCRIPTION	CAP	RD	LOC ZONE	FRONT	DEPTH	TOT LND UTS	UNIT TYPE	DT	DPTH FACT	% COND	TOT ADJ	UNIT PRICE	ADJ UNIT PRICE	LAND VALUE	OTHER ADJUSTMENTS AND NOTES	YEAR	DENSITY	DECL	FRZ	YR	CONSRV
1	000100	C	RES	100	0005	RSF-2	85.00	200.00	0.39	AC		1.00	1.00	1.30	315,000.00	409,500.00	159,705							

REVIEW DATE 05/12/2019 BY KBA Total Acres: 0.39 Total Land Value: 159,705 Market: 0 Agricultural: 0 Common: 159,705 PRINTED 07/30/2025 BY SYS