LOT 16
IN OR 1914/1385
ESMT PT OR 537/22

CLARK ROBERT J & TINA M DEBARTOLO
1622 OCEAN FOREST DR
FERNANDINA BEACH, FL 32034

2025

00-00-30-046F-0016-0000

NASSAU COUNTY PROPERTY

BUILDING CHARACTERISTICS

ELEMENT	CD	CONSTRUCTION
Exterior Wall	16	WD FR STUC 100
Roof Structur	03	GABLE/HIP 100
Roof Cover	03	COMP SHNGL 100
Interior Wall	05	DRYWALL 100
Interior Floo	12	HARDWOOD 60
Interior Floo	14	CARPET 40
Air Condition	03	CENTRAL 100
Heating Type	04	AIR DUCTED 100
Bedrooms		4 100
Bathrooms		3 100
Frame	02	WOOD FRAME 100
Stories	2.	2. 100
Units		0 100
Occupancy	00	NONE 100
Quality	05	Quality Level 05
DOR CODE	0100	SINGLE FAMILY
MAP NUM		MKT AREA 03
NEIGHBORHOOD/LOC	3033.00	

AREA TYPE	TOTAL GROSS AREA	PCT OF BASE	YEAR	TOT ADJ AREA	SUBAREA MARKET VALUE
BAS	1,558	100	2015	1,558	306,669
FEP	228	80	2016	182	35,824
FGR	700	55	2015	385	75,781
FOP	64	30	2015	19	3,740
FUS	2,210	100	2015	2,210	435,005
TOTALS	4,760			4,354	857,020

MARKET ADJUSTMENTS

TYPE	MDL	EFF. AREA	TOT ADJ PTS	EFF. BASE RATE	REPL. COST NEW	AYB	EYB	ECON	FNCT		NORM	% COND
0500	11	4,354	130.4512	206.11	897,403	2015	2015	0	0	0	4.50	95.50

1 SFR CUST – 100% - 2016 Heated Area: 3768 HX Base Yr 2016

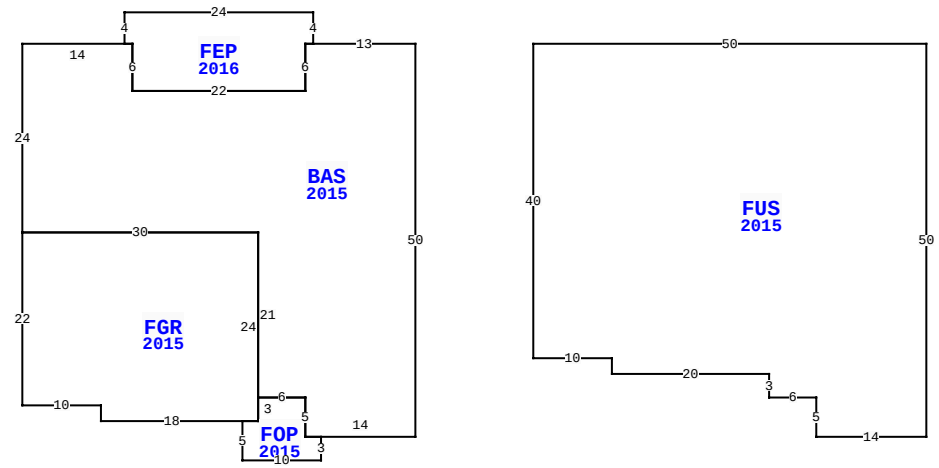

BLD DATE		LGL DATE	
XF DATE		LAND DATE	03/14/2024 MLU
INC DATE		AG DATE	

1622 OCEAN FOREST DR, FERNANDINA BEACH

NASSAU COUNTY PROPERTY — VALUATION SUMMARY

VALUATION BY		STANDARD
Tax Group: 8	Tax Dist:	
BUILDING MARKET VALUE		857,020
TOTAL MARKET OB/XF VALUE		11,338
TOTAL LAND VALUE - MARKET		350,000
TOTAL MARKET VALUE		1,218,358
SOH/AGL Deduction		698,460
ASSESSED VALUE		519,898
TOTAL EXEMPTION VALUE	HX HB VX	55,722
BASE TAXABLE VALUE		464,176
TOTAL JUST VALUE		1,218,358
NCON VALUE		0
INCOME VALUE		
PREVIOUS YEAR MKT VALUE		887,617

PERMIT NUM	DESCRIPTION	AMT	ISSUED
B1632746	WINDOWFSP	7,716	07/01/2016
B1429242	CO ISSUED	0	03/10/2015
B1429242	NEW CONSTR	445,752	08/01/2014

SALES DATA

OFF RECORD Number	DATE	TYPE INST	Q U /	V I /	RSN CD	SALE PRICE
1914/1385	4/25/2014	WD	Q	V	02	135,000
GRANTOR: KIRKPATRICK PATRICIA						
GRANTEE: CLARK ROBERT J & TI						
0903/1457	10/15/1999	WD	Q	V		60,000
GRANTOR: GERALD JOHN D						
GRANTEE: KIRKPATRICK DAVID W						

BUILDING NOTES

BUILDING DIMENSIONS

BAS=[YR=2015] W13 FEP=[YR=2016] N4 W24 S4 E1 S6 E22 N6 E1$ W1 S6 W22 N6 W14 S24 FGR=[YR=2015] S22 E10 S2 E18 FOP=[YR=2015] S5 E10 N3 W2 N5 W6 S3 W2$ E2 N24 W30$ E30 S21 E6 S5 E14 N50$ PTR=E15 FUS=[YR=2015] E50 S50 W14 N5 W6 N3 W20 N2 W10 N40$ W15$.

EXTRA FEATURES

LN	OB/XF CODE	DESCRIPTION	BLD	CAP	L	W	UNITS	UT	Adj R	ADJ UNIT PRICE	ORIG COND	YEAR ON	YEAR ACTUAL	Q	% COND	OB/XF MKT VALUE	NOTES
1	0855	CONC PAVER	0	100	0	0	1,136.00	SF	7.00	7.00	100	2015	2015	3	95	7,554	
2	0855	CONC PAVER	0	100	0	0	40.00	SF	7.00	7.00	100	2015	2015	3	95	266	
3	0855	CONC PAVER	0	100	0	0	529.00	SF	7.00	7.00	100	2016	2016	3	95	3,518	

LAND DESCRIPTION

TOTAL OB/XF 11,338

LN	USE CODE	CLS	LAND USE DESCRIPTION	CAP	RD	LOC ZONE	FRONT	DEPTH	TOT LND UTS	UNIT TYPE	DT	DPTH FACT	% COND	TOT ADJ	UNIT PRICE	ADJ UNIT PRICE	LAND VALUE	OTHER ADJUSTMENTS AND NOTES	YEAR	DENSITY	DECL	FRZ	YR	CONSRV
1	000100	C	RES	100		RSF-1	0.00	0.00	1.00	LT		1.00	1.00	1.00	350,000.00	350,000.00	350,000							

REVIEW DATE 05/12/2019 BY KBA Total Acres: 0.00 Total Land Value: 350,000 Market: 0 Agricultural: 0 Common: 350,000 PRINTED 07/30/2025 BY SYS