LOT 10
IN OR 675 PG 1709
OCEAN DUNES PB 4/54

SMITH MALLORY S TRUST/SMITH MALLORY S TRUSTEE
P O BOX 16809
FERNANDINA BEACH, FL 32035-3131

**2025**

**00-00-30-0450-0010-0000**

## BUILDING CHARACTERISTICS

| ELEMENT | CD | CONSTRUCTION |
|---|---|---|
| Exterior Wall | 10 | ABOVE AVG 60 |
| Exterior Wall | 17 | CB STUCCO 40 |
| Roof Structur | 08 | IRREGULAR 100 |
| Roof Cover | 07 | CONC TILE 100 |
| Interior Wall | 05 | DRYWALL 100 |
| Interior Floo | 12 | HARDWOOD 70 |
| Interior Floo | 14 | CARPET 30 |
| Air Condition | 03 | CENTRAL 100 |
| Heating Type | 04 | AIR DUCTED 100 |
| Bedrooms | | 3 100 |
| Bathrooms | | 4.5 100 |
| Frame | 02 | WOOD FRAME 100 |
| Stories | 2. | 2. 100 |
| Units | | 0 100 |
| BUD8 Adjustme | 05 | DIST 1A 100 |
| Quality | 04 | Quality Level 04 |
| DOR CODE | 0100 | SINGLE FAMILY |
| MAP NUM | | MKT AREA 03 |
| NEIGHBORHOOD/LOC | 1053.00 | |

| AREA TYPE | TOTAL GROSS AREA | PCT OF BASE | YEAR | TOT ADJ AREA | SUBAREA MARKET VALUE |
|---|---|---|---|---|---|
| BAS | 1,712 | 100 | 1993 | 1,712 | 301,680 |
| BAS | 160 | 100 | 1999 | 160 | 28,195 |
| BAS | 188 | 100 | 2004 | 188 | 33,129 |
| FBM | 1,516 | 80 | 1993 | 1,213 | 213,749 |
| FGR | 612 | 55 | 1993 | 337 | 59,384 |
| FOP | 42 | 30 | 1993 | 13 | 2,290 |
| FOP | 210 | 30 | 1997 | 63 | 11,102 |
| FUS | 984 | 100 | 1993 | 984 | 173,396 |
| STR | 132 | 10 | 1997 | 13 | 2,290 |
| UOP | 538 | 20 | 1997 | 108 | 19,031 |
| TOTALS | 6,094 | | | 4,791 | 844,247 |

## MARKET ADJUSTMENTS

| TYPE | MDL | EFF. AREA | TOT ADJ PTS | EFF. BASE RATE | REPL. COST NEW | AYB | EYB | ECON | FNCT | | NORM | % COND |
|---|---|---|---|---|---|---|---|---|---|---|---|---|
| 0500 | 11 | 4,791 | 132.9319 | 210.03 | 1,006,254 | 1986 | 1990 | 0 | 0 | 0 | 16.10 | 83.90 |

1 SFR CUST – 100% - 2001 Heated Area: 4257 HX Base Yr 2001

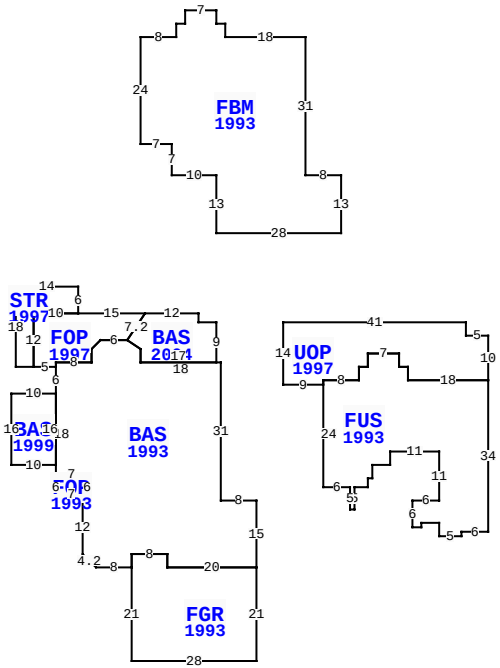


4444 S FLETCHER AVE, FERNANDINA BEACH

| | | | |
|---|---|---|---|
| BLD DATE | | LGL DATE | |
| XF DATE | | LAND DATE | 05/07/2025 MLU |
| INC DATE | | AG DATE | |

## NASSAU COUNTY PROPERTY

PAGE 1 of 1 8

### VALUATION SUMMARY

| | | |
|---|---|---|
| VALUATION BY | | STANDARD |
| Tax Group: 8 | Tax Dist: | |
| BUILDING MARKET VALUE | | 844,247 |
| TOTAL MARKET OB/XF VALUE | | 8,262 |
| TOTAL LAND VALUE - MARKET | | 1,624,120 |
| TOTAL MARKET VALUE | | 2,476,629 |
| SOH/AGL Deduction | | 1,463,534 |
| ASSESSED VALUE | | 1,013,095 |
| TOTAL EXEMPTION VALUE | HX HB | 50,722 |
| BASE TAXABLE VALUE | | 962,373 |
| TOTAL JUST VALUE | | 2,476,629 |
| NCON VALUE | | 0 |
| INCOME VALUE | | |
| PREVIOUS YEAR MKT VALUE | | 2,223,818 |

| PERMIT NUM | DESCRIPTION | AMT | ISSUED |
|---|---|---|---|
| B970612 | REPAIR/RRF | 15,000 | 06/01/1997 |
| B9703850 | REPAIR/RRF | 65,000 | 04/01/1997 |

## SALES DATA

| OFF RECORD Number | DATE | TYPE INST | Q / U | V / I | RSN CD | SALE PRICE |
|---|---|---|---|---|---|---|
| 0675/1709 | 2/23/1993 | WD | Q | I | | 520,000 |
| GRANTOR: CORY EDWARD & V | | | | | | |
| GRANTEE: SMITH MALLORY TRUST | | | | | | |
| 0437/0155 | 10/01/1984 | WD | Q | V | | 110,000 |
| GRANTOR: | | | | | | |
| GRANTEE: | | | | | | |

## BUILDING NOTES

## BUILDING DIMENSIONS

BAS=[YR=2004] W4 N2 W12 FOP=[YR=1997] W15 STR=[YR=1997] N6 W14 S18 E4 N12 E10$ W10 S12 E5 BAS=[YR=1993] S6 BAS=[YR=1999] W10 S16 E10 N16$ S18 FOP=[YR=1993] S6 E7 N6 W7$ E7 S6 W1 S12 D3 R3 E8 FGR=[YR=1993] S21 E28 N21 W20 N3 W8 S3$ N3 E8 S3 E20 N15 W8 N31 W18 N3 U2 L3 W6 D2 L2 S3 W8 S1$ N1E8 N3 R2 U2 E6 U6 R4 $ D6 L4 D2 R3 S3 E17 N9$ PTR= E15 UOP=[YR=1997] E41 S3 E5 S10 FUS=[YR=1993] S34 W6 S1 W5 N3 W4 S1 W2 N6 E6 N11 W11 S3 W4 S3 W1 S2 W3 S5 W1 N5W6 N24 E8 N3 E2 N3 E7 S3 E2 S3 E18$ W18 N3 W2 N3 W7 S3 W2 S3 W8 S1 W9 N14$ W15$ PTR=N20 FBM=[YR=1993] N13 W10 N7 W7 N24 E8 N3 E2 N3 E7 S3 E2 S3 E18 S31 E8S13 W28$ S20$.

## EXTRA FEATURES

| LN | OB/XF CODE | DESCRIPTION | BLD | CAP | L | W | UNITS | UT | Adj R | ADJ UNIT PRICE | ORIG COND | YEAR ON | YEAR ACTUAL | Q | % COND | OB/XF MKT VALUE | NOTES |
|---|---|---|---|---|---|---|---|---|---|---|---|---|---|---|---|---|---|
| 1 | 0812 | CONCRETE C | 0 | 100 | 0 | 0 | 1,565.00 | SF | 4.00 | 4.00 | 100 | 1986 | 1986 | 3 | 47 | 2,942 | |
| 2 | 0504 | FP-ELECTRI | 0 | 100 | 0 | 0 | 1.00 | UT | 2,000.00 | 2,000.00 | 100 | 1986 | 1986 | 3 | 58 | 1,160 | |
| 3 | 1126 | CB/STC 8" | 0 | 100 | 0 | 0 | 240.00 | SF | 8.00 | 8.00 | 100 | 1986 | 1986 | 3 | 47 | 902 | |
| 4 | 0415 | BEACHWALK | 0 | 100 | 218 | 4 | 872.00 | SF | 5.75 | 5.75 | 100 | 1988 | 1988 | 3 | 20 | 1,003 | |
| 5 | 0810 | CONCRETE A | 0 | 100 | 51 | 3 | 24.00 | SF | 6.50 | 6.50 | 100 | 1986 | 1986 | 3 | 47 | 73 | |
| 6 | 0811 | CONCRETE B | 0 | 100 | 0 | 0 | 488.00 | SF | 5.20 | 5.20 | 100 | 2006 | 2006 | 3 | 86 | 2,182 | |

## LAND DESCRIPTION

TOTAL OB/XF 8,262

| LN | USE CODE | CLS | LAND USE DESCRIPTION | CAP | RD | LOC ZONE | FRONT | DEPTH | TOT LND UTS | UNIT TYPE | DT | DPTH FACT | % COND | TOT ADJ | UNIT PRICE | ADJ UNIT PRICE | LAND VALUE | OTHER ADJUSTMENTS AND NOTES | YEAR | DENSITY | DECL | FRZ | YR | CONSRV |
|---|---|---|---|---|---|---|---|---|---|---|---|---|---|---|---|---|---|---|---|---|---|---|---|---|
| 1 | 000120 | C | RES OCEAN | 100 | | RSF-1 | 85.00 | 400.00 | 85.48 | FF | | 1.00 | 1.00 | 1.00 | 19,000.00 | 19,000.00 | 1,624,120 | | | | | | | |

REVIEW DATE 04/22/2020 BY DJA Total Acres: 0.00 Total Land Value: 1,624,120 Market: 0 Agricultural: 0 Common: 1,624,120 PRINTED 07/30/2025 BY SYS