LOT 6
IN OR 364 PG 94
OCEAN DUNES PB 4/54

BANASZAK S HOWARD JR & OLIVIA
4436 S FLETCHER AVE
FERNANDINA BEACH, FL 32034

2025

00-00-30-0450-0006-0000

NASSAU COUNTY PROPERTY

BUILDING CHARACTERISTICS

ELEMENT	CD	CONSTRUCTION
Exterior Wall	23	REINF CONC 100
Roof Structur	08	IRREGULAR 100
Roof Cover	11	SLATE 100
Interior Wall	05	DRYWALL 100
Interior Floo	11	CLAY TILE 100
Air Condition	03	CENTRAL 100
Heating Type	04	AIR DUCTED 100
Bedrooms		4 100
Bathrooms		4.5 100
Frame	02	WOOD FRAME 100
Stories	3.	3. 100
Units		0 100
Quality	04	Quality Level 04

DOR CODE 0100 SINGLE FAMILY
MAP NUM | MKT AREA 03
NEIGHBORHOOD/LOC 1053.00

AREA TYPE	TOTAL GROSS AREA	PCT OF BASE	YEAR	TOT ADJ AREA	SUBAREA MARKET VALUE
FGR	476	55	2009	262	66,743
FGR	591	55	2009	325	82,792
FOP	21	30	2009	6	1,528
FOP	85	30	2009	26	6,623
FOP	102	30	2009	31	7,897
FOP	153	30	2009	46	11,718
FOP	265	30	2009	80	20,380
FST	405	55	2009	223	56,808
FST	408	55	2009	224	57,063
FST	644	55	2009	354	90,180
TOTALS	9,150			6,333	1,613,300

MARKET ADJUSTMENTS

TYPE	MDL	EFF. AREA	TOT ADJ PTS	EFF. BASE RATE	REPL. COST NEW	AYB	EYB	ECON	FNCT		NORM	% COND
0500	11	6,333	174.3060	275.40	1,744,108	2009	2009	0	0	0	7.50	92.50

1 SFR CUST – 100% - 2020 Heated Area: 4347 HX Base Yr 2020

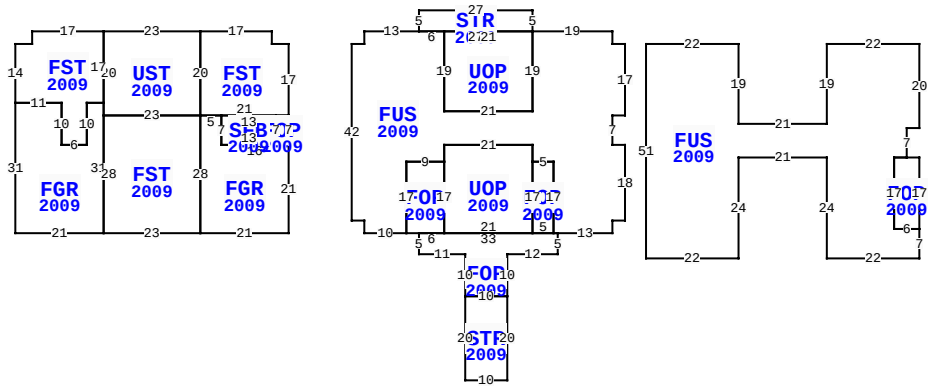

** This building has 18 Sub-Areas

4436 S FLETCHER AVE, FERNANDINA BEACH

BLD DATE		LGL DATE	
XF DATE		LAND DATE	05/07/2025 MLU
INC DATE		AG DATE	

VALUATION SUMMARY

VALUATION BY	STANDARD
Tax Group: 8	Tax Dist:
BUILDING MARKET VALUE	1,613,300
TOTAL MARKET OB/XF VALUE	57,369
TOTAL LAND VALUE - MARKET	1,614,810
TOTAL MARKET VALUE	3,285,479
SOH/AGL Deduction	1,278,328
ASSESSED VALUE	2,007,151
TOTAL EXEMPTION VALUE	HX HB 50,722
BASE TAXABLE VALUE	1,956,429
TOTAL JUST VALUE	3,285,479
NCON VALUE	0
INCOME VALUE	
PREVIOUS YEAR MKT VALUE	3,003,685

PERMIT NUM	DESCRIPTION	AMT	ISSUED
C17366	CO ISSUED	0	02/19/2010
P12437	OTHER	0	06/01/2007
M11796	MECH OTHER	0	07/01/2006
P0611280	OTHER	0	06/01/2006
E17182	ELEC OTHER	2,000	04/01/2006
R09047	REPAIR/RRF	15,000	03/01/2006

SALES DATA

OFF RECORD Number	DATE	TYPE INST	Q / U	V / I	RSN CD	SALE PRICE
0302/0194	9/01/1979	WD	U	V		61,000

GRANTOR:
GRANTEE:

BUILDING NOTES

EXTRA FEATURES

LN	OB/XF CODE	DESCRIPTION	BLD	CAP	L	W	UNITS	UT	Adj R	ADJ UNIT PRICE	ORIG COND	YEAR ON	YEAR ACTUAL	Q	% COND	OB/XF MKT VALUE	NOTES
1	0500	FP-PRE FAB	0	100	0	0	1.00	UT	3,500.00	3,500.00	100	2009	2009	3	92	3,220	
2	0416	DUNEWALKS	0	100	362	4	1,448.00	SF	30.00	30.00	100	2009	2009	3	35	15,204	
3	0810	CONCRETE A	0	100	0	0	2,719.00	SF	6.50	6.50	100	2009	2009	3	89	15,729	
4	0920	CWALL-WD/M	0	100	0	0	79.00	LF	390.00	390.00	100	2009	2009	3	35	10,784	
5	1126	CB/STC 8"	0	100	0	0	582.00	SF	24.00	24.00	100	2009	2009	3	89	12,432	

BUILDING DIMENSIONS

FST=[YR=2009] W4N3 W17 UST=[YR=2009] W23 FST=[YR=2009]
W17S3W4S14 FGR=[YR=2009] S31 E21 FST=[YR=2009] E23
FGR=[YR=2009] E21 N21 FOP=[YR=2009] N7W3 SFB=[YR=2009] W13S7
E13N7$ S7E3$ W16N7W5S28$ N28 W23S28$ N31W4S10W6N10W11$ E11
S10E6N10E4N17$ S20E23N20$ S20 E21N17$ PTR=E15 FUS=[YR=2009]
E3N3 E13 STR=[YR=2009] N5E27S5 UOP=[YR=2009]
S19W21N19E21$W27$ E6S19E21N19 E19S3E3S17 W3S7E3 S18W3S3 W13
FOP=[YR=2009] S5W12S10 STR=[YR=2009] S20 W10N20E10$
W10N10W11N5 FOP=[YR=2009] W3N17E9 UOP=[YR=2009] N4E21 S4
FOP=[YR=2009] E5S17W5N17$S17W21 N17$ S17W6$ E33$ W1N17W5N4W21
S4W9S17W10N3W3N42$ W15$ PTR= E85 FUS=[YR=2009]
E22S19E21N19E22S20 W3S7 FOP=[YR=2009] E3S17W6N17E3$W3

LAND DESCRIPTION

TOTAL OB/XF 57,369

LN	USE CODE	CLS	LAND USE DESCRIPTION	CAP	RD	LOC ZONE	FRONT	DEPTH	TOT LND UTS	UNIT TYPE	DT	DPTH FACT	% COND	TOT ADJ	UNIT PRICE	ADJ UNIT PRICE	LAND VALUE	OTHER ADJUSTMENTS AND NOTES	YEAR	DENSITY	DECL	FRZ	YR	CONSRV
1	000120	C	RES OCEAN	100		RSF-1	85.00	400.00	84.99	FF		1.00	1.00	1.00	19,000.00	19,000.00	1,614,810							

REVIEW DATE 01/07/2019 BY DJA Total Acres: 0.00 Total Land Value: 1,614,810 Market: 0 Agricultural: 0 Common: 1,614,810 PRINTED 07/30/2025 BY SYS